Company name:
Created by:
Phone:

Date: 11/23/2026

Qty.	Description
1	**MAGNA1 50-120 F N**



Note! Product picture may differ from actual product

Product No.: 99221361

The MAGNA1 circulator pump is the simple option for a job well done. It is a single-phase pump with an integrated controller and operating panel, built on a maintenance-free canned-rotor design. The pump combines robust material and strong design with air-cooled electronics for reliable operation.

MAGNA1 ensures low energy consumption and reduced operating costs, while its maintenance-free design optimizes uptime. The intuitive interface enables fast installation and easy operation, supported by essential control and monitoring features including fault relay and digital start/stop input.

Powered by a high-efficiency 4-pole permanent-magnet motor and controlled by an integrated frequency converter, MAGNA1 delivers strong energy performance in line with the strictest requirements for its product type.

It is ideal for heating and cooling applications such as mixing loops, heating and AC surfaces, ground-source heat pump systems, and small chillers.

Available with cast-iron and stainless-steel pump housing with a wide product range. With an EEI less than 0.20, MAGNA1 is a versatile choice for a wide series of systems, perfect as a main pump where reliable performance and straightforward control are required.

Company name:
Created by:
Phone:

Date: 11/23/2026

99221361 MAGNA1 50-120 F N

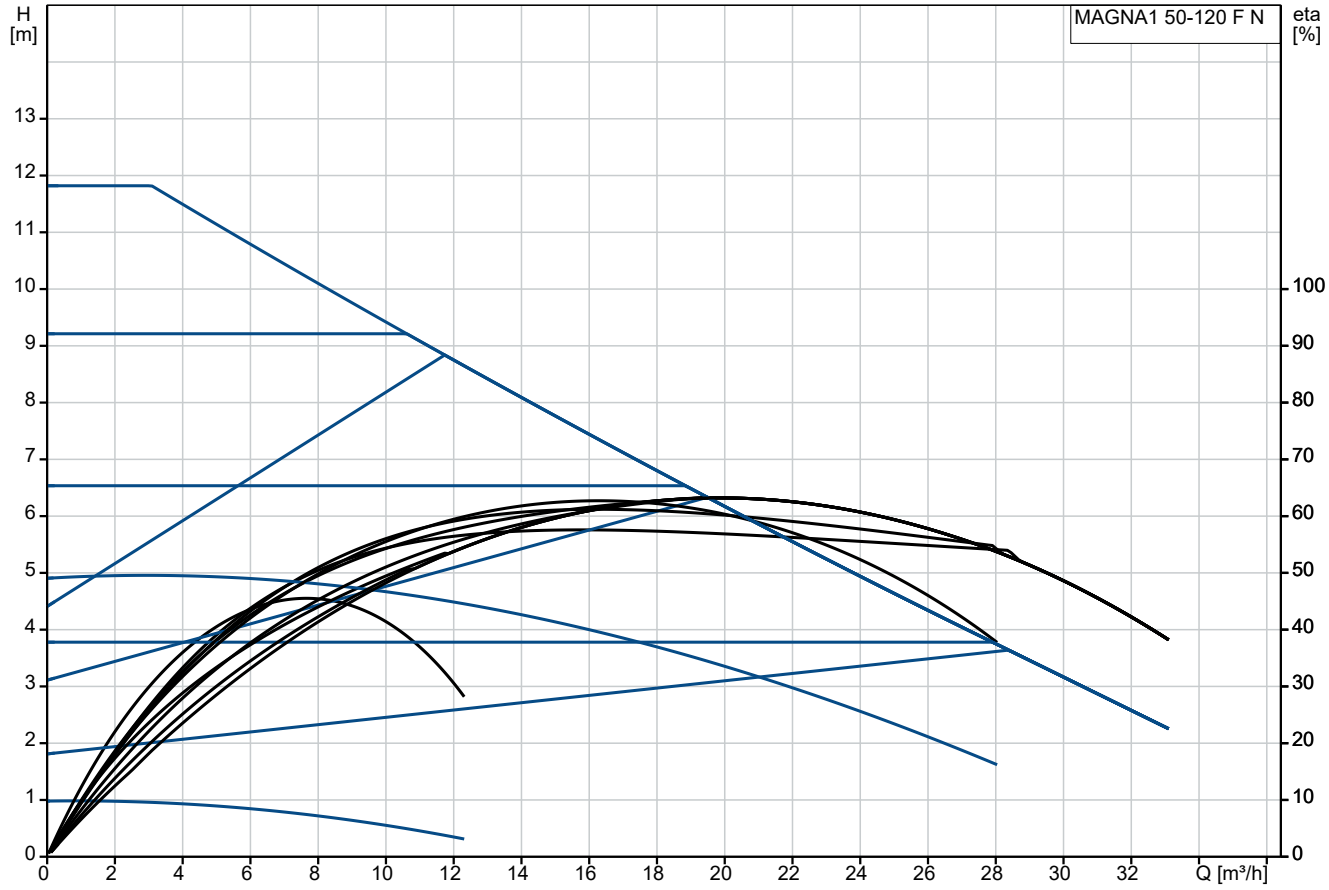

Pumped liquid = Water
Liquid temperature during operation = 20 °C
Density = 998.2 kg/m³

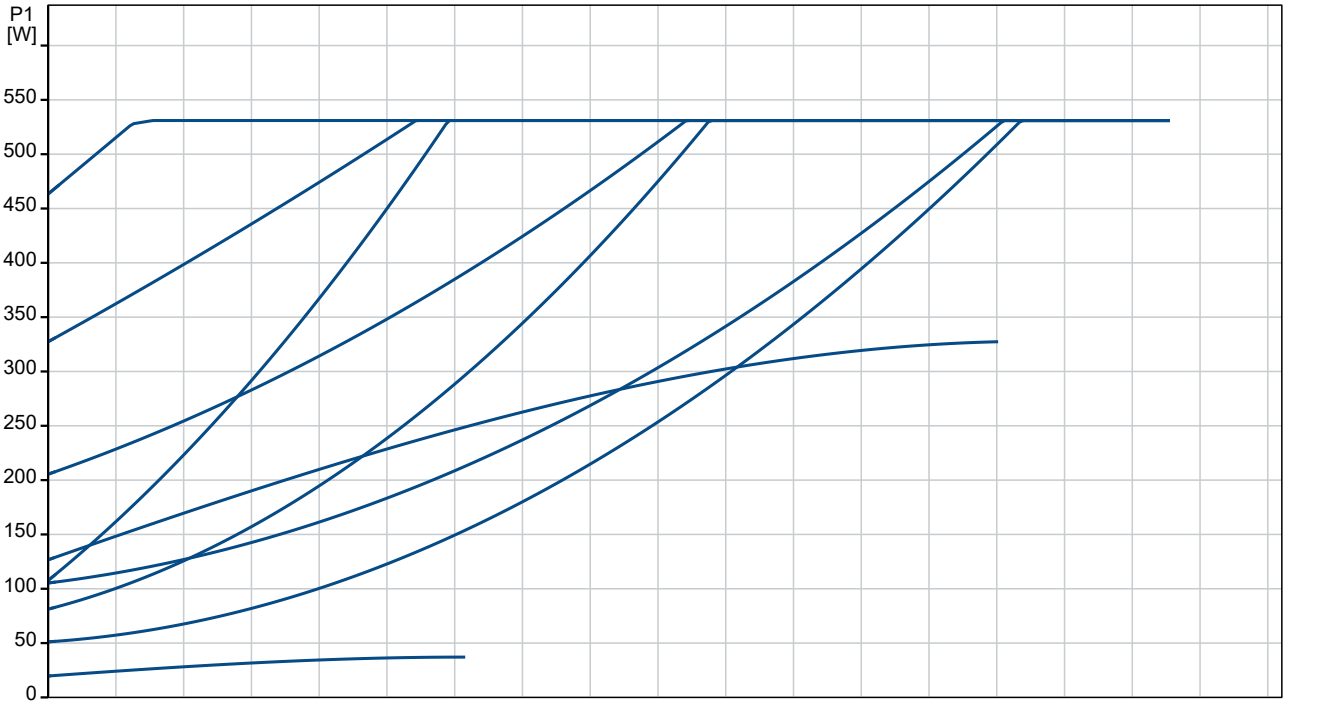

Company name:

Created by:

Phone:

Date: 11/23/2026

Description	Value
General information:	
Product name:	MAGNA1 50-120 F N
Product No:	99221361
EAN number:	5712608943331
Technical:	
Maximum head:	120 dm
TF class:	110
Approvals:	CE,VDE,EAC,MOROCCO,UKCA, TSE,RCM,UkrSEPRO
Approvals for drinking water:	WRAS, ACS
Model:	C
Materials:	
Pump housing:	Stainless steel
	EN 1.4308
	ASTM A351-CF8
Impeller:	Composite
Installation:	
Range of ambient temperature:	0 .. 40 °C
Maximum operating pressure:	10 bar
Type of connection:	DIN
Size of connection:	DN 50
Pressure rating for connection:	PN 6/10
Port-to-port length:	280 mm
Liquid:	
Pumped liquid:	Water
Liquid temperature range:	-10 .. 110 °C
Selected liquid temperature:	20 °C
Density:	998.2 kg/m³
Electrical data:	
Maximum power input - P1:	533 W
P1 min.:	20.2 W
Mains frequency:	50 / 60 Hz
Rated voltage:	1 x 230 V
Minimum current consumption:	0.22 A
Maximum current consumption:	2.37 A
Maximum speed:	4188 rpm
Enclosure class (IEC 34-5):	IPX4D
Insulation class (IEC 85):	F
Others:	
Energy (EEI):	0.20
Net weight:	18.6 kg
Gross weight:	20.5 kg
Shipping volume:	0.046 m³
Environmental approvals:	CN ROHS,WEEE

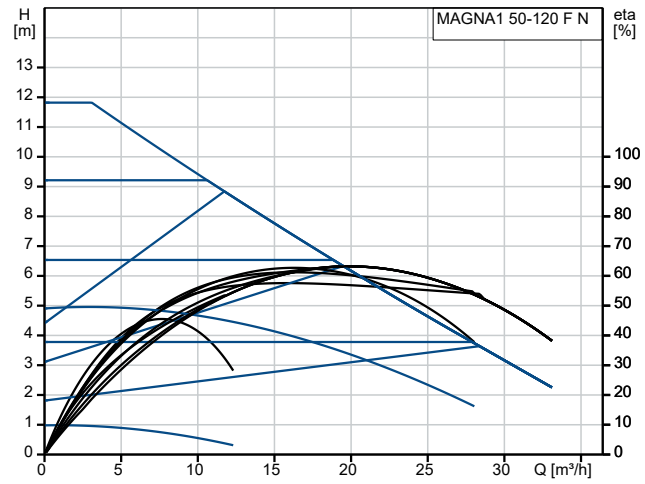

Pumped liquid = Water
Liquid temperature during operation = 20 °C
Density = 998.2 kg/m³

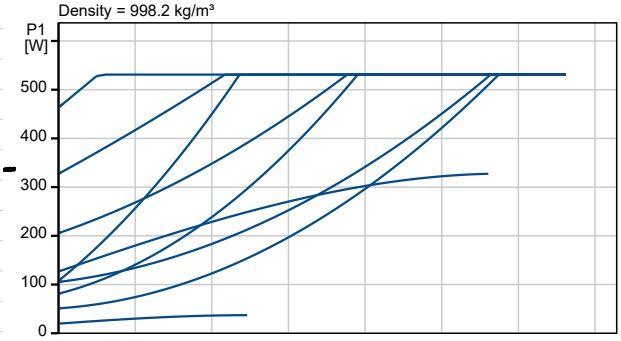

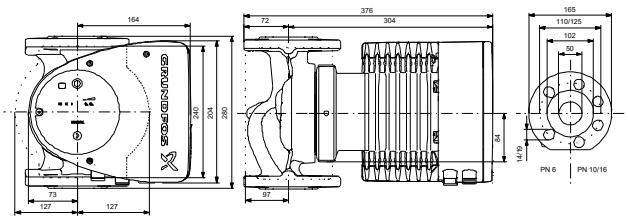

Example of mains-connected motor
with mains switch, backup fuse and additional protection

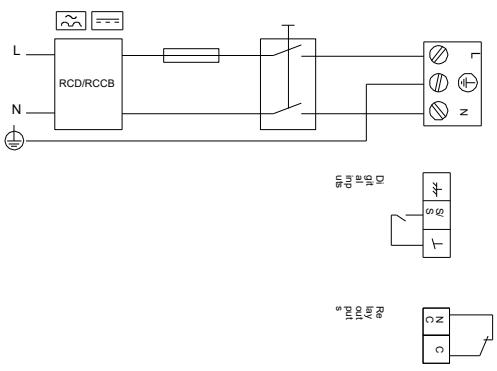

Company name:
Created by:
Phone:

Date: 11/23/2026

99221361 MAGNA1 50-120 F N

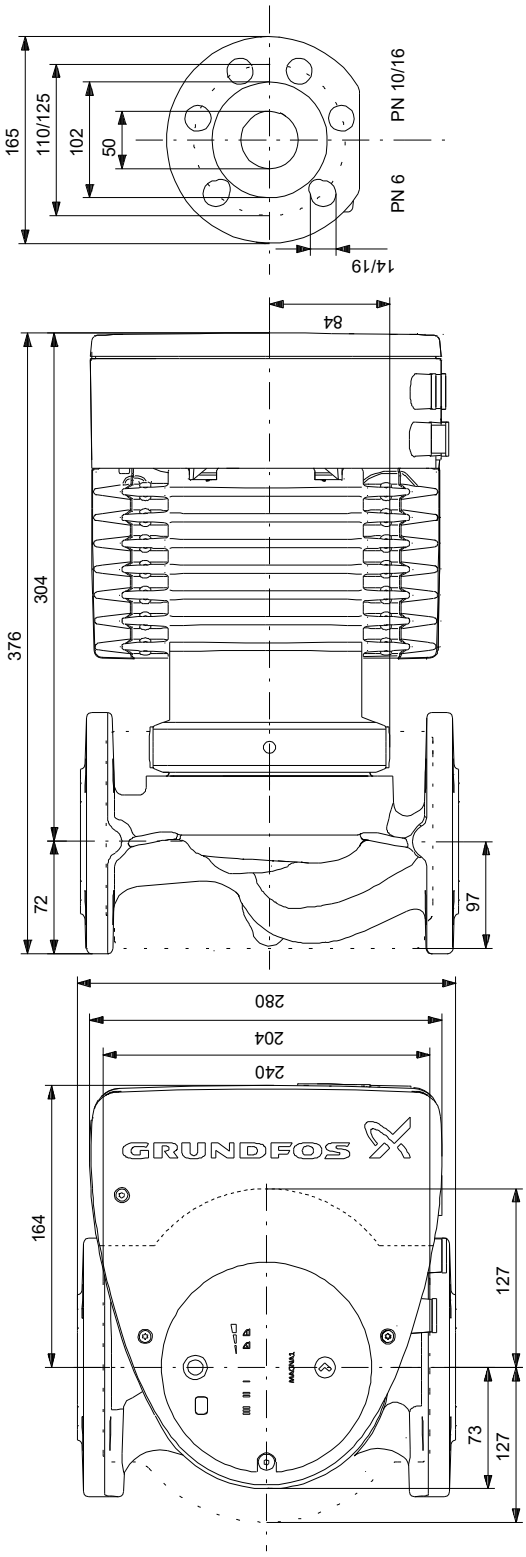

Note! All units are in [mm] unless others are stated.
Disclaimer: This simplified dimensional drawing does not show all details.