**Company name:**
**Created by:**
**Phone:**

**Date:** 11/23/2026

| Qty. | Description |
|---|---|
| 1 | **MAGNA3 32-120** |




**Note! Product picture may differ from actual product**

Product No.: 98609707

The Grundfos MAGNA3 circulator pump is the ideal choice for almost any building project – old or new. With its unrivalled energy efficiency, all-encompassing range and built-in communication capabilities, MAGNA3 is ideal for engineers and specifiers looking to create high-performance heating and cooling systems.

The pump is maintenance-free due to the canned-rotor type design. This also means that pump and motor form an integral unit without shaft seal and with only two gaskets for sealing. The bearings are lubricated by the pumped liquid.

MAGNA3 features an intuitive display and allows you to connect wirelessly with the Grundfos GO Remote app, giving you access to advanced reporting and monitoring.

MAGNA3 model E has Bluetooth, which allows you to connect directly to the Grundfos GO app on your smart phone without any need for a dongle.

The pump includes fieldbus communication via CIM modules as well as analogue and digital inputs and configurable relays.

Control features include AUTOADAPT and FLOWADAPT. FLOWADAPT reduces the need for throttling valves, thus cutting costs on system components.

MAGNA3 is the superior choice for a wide range of heating and cooling applications, including:

- mixing loops
- heating surfaces
- air conditioning surfaces
- ground-source heat pump systems
- small chiller applications.

MAGNA3 is a single-phase pump characterised by the controller and control display being integrated in the control box. The pump also has a built-in differential pressure and temperature sensor.

The pump housing is available in both cast-iron and stainless-steel versions. The composite rotor can is carbon-fibre reinforced, the bearing plate and rotor cladding are made of stainless steel and the stator housing is made of aluminium. The power electronics are air-cooled.

MAGNA3 incorporates a 4-pole synchronous, permanent-magnet motor (PM motor). This motor type is characterised by higher efficiency than a conventional asynchronous squirrel-cage motor. The pump speed is controlled by an integrated frequency converter.

**Company name:**
**Created by:**
**Phone:**

**Date:** 11/23/2026

# 98609707 MAGNA3 32-120

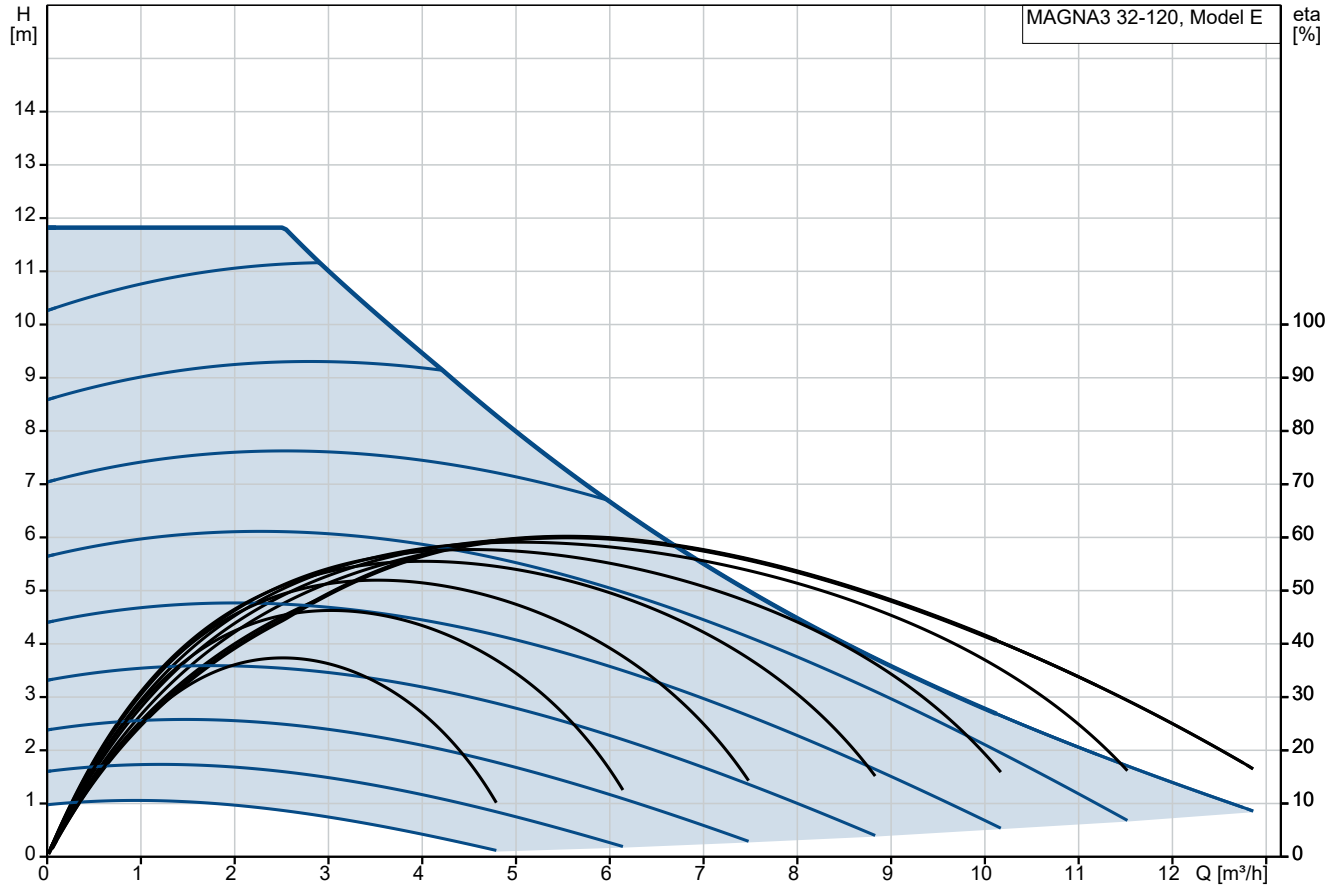


Pumped liquid = Water
Liquid temperature during operation = 20 °C
Density = 998.2 kg/m³

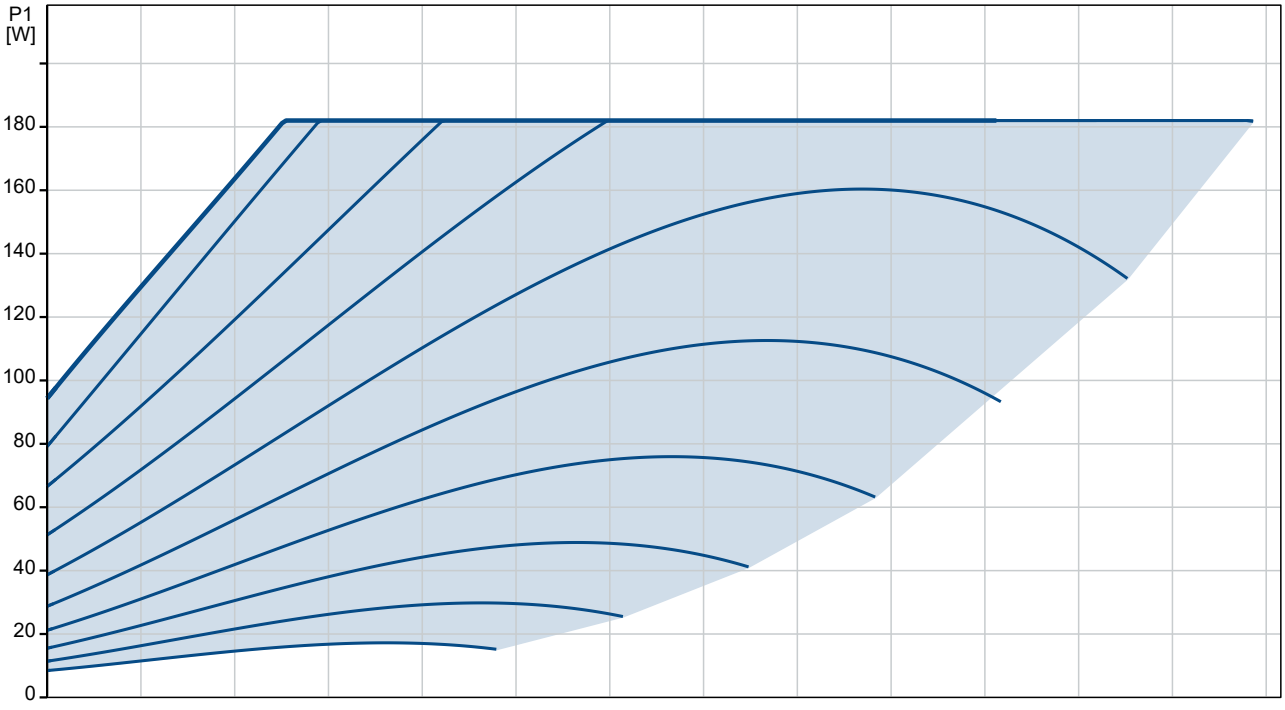

**Company name:**

**Created by:**

**Phone:**

**Date:** 11/23/2026

| Description | Value |
|---|---|
| **General information:** | |
| Product name: | MAGNA3 32-120 |
| Product No: | 98609707 |
| EAN number: | 5711498165908 |
| **Technical:** | |
| Rated flow: | 5.53 m³/h |
| Rated head: | 7.385 m |
| Maximum head: | 120 dm |
| TF class: | 110 |
| Approvals: | CE,VDE,EAC,MOROCCO,UKCA RCM,UkrSEPRO |
| Model: | E |
| **Materials:** | |
| Pump housing: | Cast iron |
| | EN 1561 EN-GJL-250 |
| | ASTM A48-200B |
| Impeller: | Composite |
| **Installation:** | |
| Range of ambient temperature: | 0 .. 40 °C |
| Maximum operating pressure: | 10 bar |
| Type of connection: | G |
| Size of connection: | 2 inch |
| Pressure rating for connection: | PN 10 |
| Port-to-port length: | 180 mm |
| **Liquid:** | |
| Pumped liquid: | Water |
| Liquid temperature range: | -10 .. 110 °C |
| Selected liquid temperature: | 20 °C |
| Density: | 998.2 kg/m³ |
| **Electrical data:** | |
| Maximum power input - P1: | 182 W |
| P1 min.: | 9 W |
| Mains frequency: | 50 / 60 Hz |
| Rated voltage: | 1 x 230 V |
| Minimum current consumption: | 0.09 A |
| Maximum current consumption: | 1.56 A |
| Maximum speed: | 4980 rpm |
| Enclosure class (IEC 34-5): | IPX4D |
| Insulation class (IEC 85): | F |
| **Others:** | |
| Energy (EEI): | 0.18 |
| Net weight: | 5.03 kg |
| Gross weight: | 6.04 kg |
| Shipping volume: | 0.015 m³ |
| Swedish RSK No.: | 5758864 |
| Finnish LVI No.: | 4615357 |
| Norwegian NRF no.: | 1397410 |
| Country of origin: | DE |
| Custom tariff no.: | 84137030 |
| Environmental approvals: | CN ROHS,WEEE |

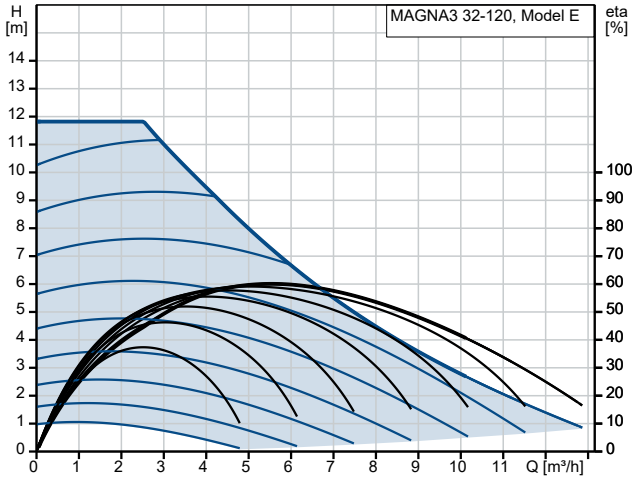


Pumped liquid = Water
Liquid temperature during operation = 20 °C
Density = 998.2 kg/m³

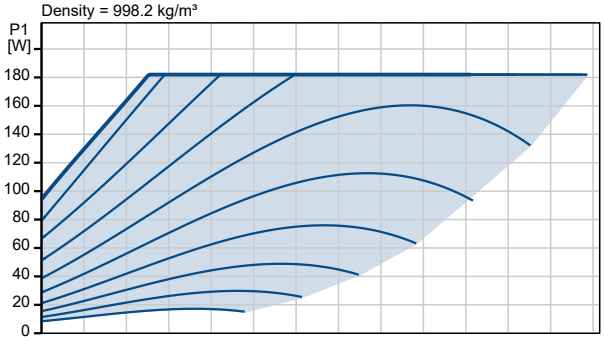


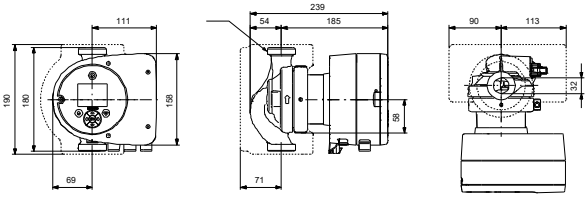

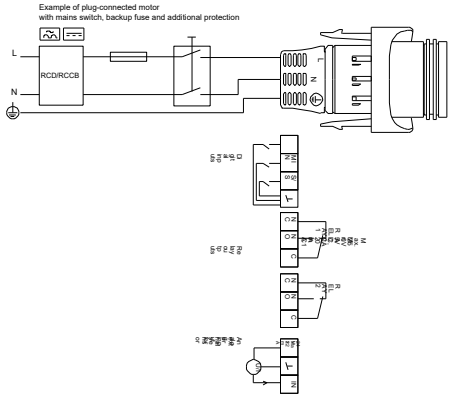

**Company name:**
**Created by:**
**Phone:**

**Date:** 11/23/2026

# 98609707 MAGNA3 32-120

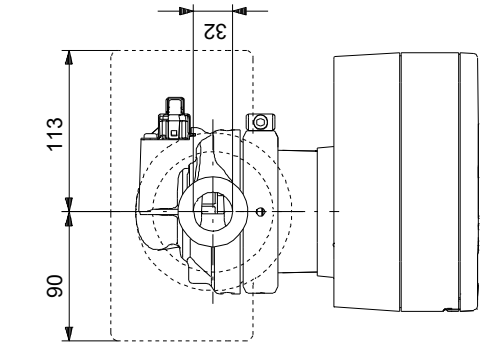


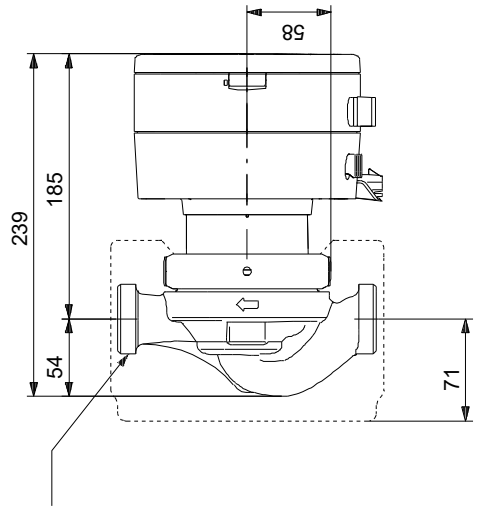


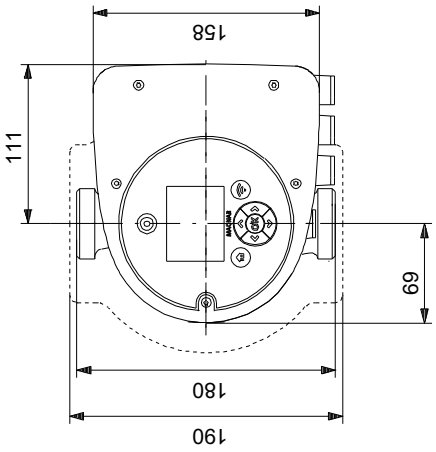


Note! All units are in [mm] unless others are stated.
Disclaimer: This simplified dimensional drawing does not show all details.