Company name:
Created by:
Phone:

Date: 11/23/2026

Qty.	Description
1	**MAGNA3 25-60**



Note! Product picture may differ from actual product

Product No.: 97924245

The Grundfos MAGNA3 circulator pump is the ideal choice for almost any building project – old or new. With its unrivalled energy efficiency, all-encompassing range and built-in communication capabilities, MAGNA3 is ideal for engineers and specifiers looking to create high-performance heating and cooling systems.

The pump is maintenance-free due to the canned-rotor type design. This also means that pump and motor form an integral unit without shaft seal and with only two gaskets for sealing. The bearings are lubricated by the pumped liquid.

MAGNA3 features an intuitive display and allows you to connect wirelessly with the Grundfos GO Remote app, giving you access to advanced reporting and monitoring.

MAGNA3 model E has Bluetooth, which allows you to connect directly to the Grundfos GO app on your smart phone without any need for a dongle.

The pump includes fieldbus communication via CIM modules as well as analogue and digital inputs and configurable relays.

Control features include AUTOADAPT and FLOWADAPT. FLOWADAPT reduces the need for throttling valves, thus cutting costs on system components.

MAGNA3 is the superior choice for a wide range of heating and cooling applications, including:

- mixing loops
- heating surfaces
- air conditioning surfaces
- ground-source heat pump systems
- small chiller applications.

MAGNA3 is a single-phase pump characterised by the controller and control display being integrated in the control box. The pump also has a built-in differential pressure and temperature sensor.

The pump housing is available in both cast-iron and stainless-steel versions. The composite rotor can is carbon-fibre reinforced, the bearing plate and rotor cladding are made of stainless steel and the stator housing is made of aluminium. The power electronics are air-cooled.

MAGNA3 incorporates a 4-pole synchronous, permanent-magnet motor (PM motor). This motor type is characterised by higher efficiency than a conventional asynchronous squirrel-cage motor. The pump speed is controlled by an integrated frequency converter.

Company name:
Created by:
Phone:

Date: 11/23/2026

97924245 MAGNA3 25-60

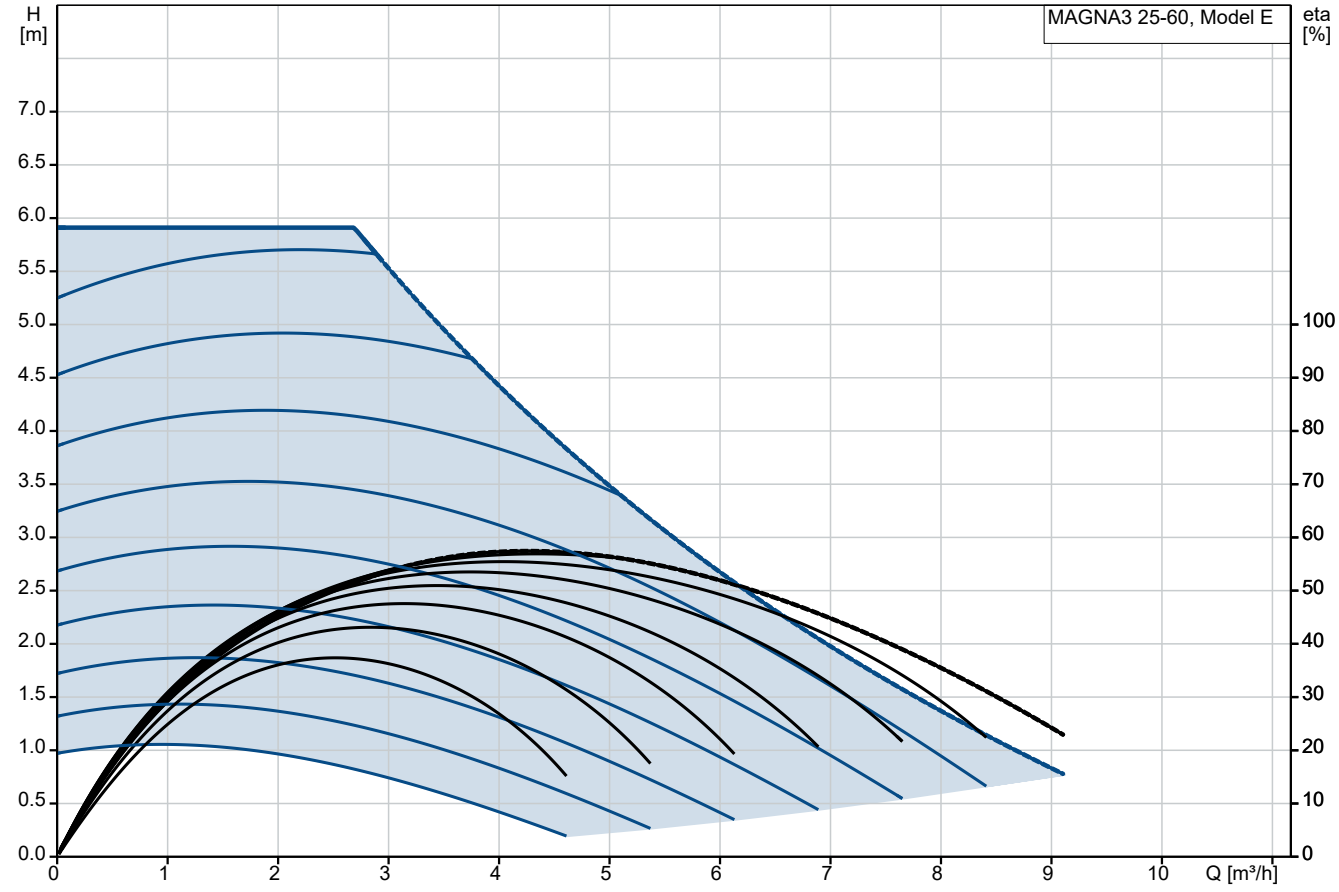

Pumped liquid = Water
Liquid temperature during operation = 20 °C
Density = 998.2 kg/m³

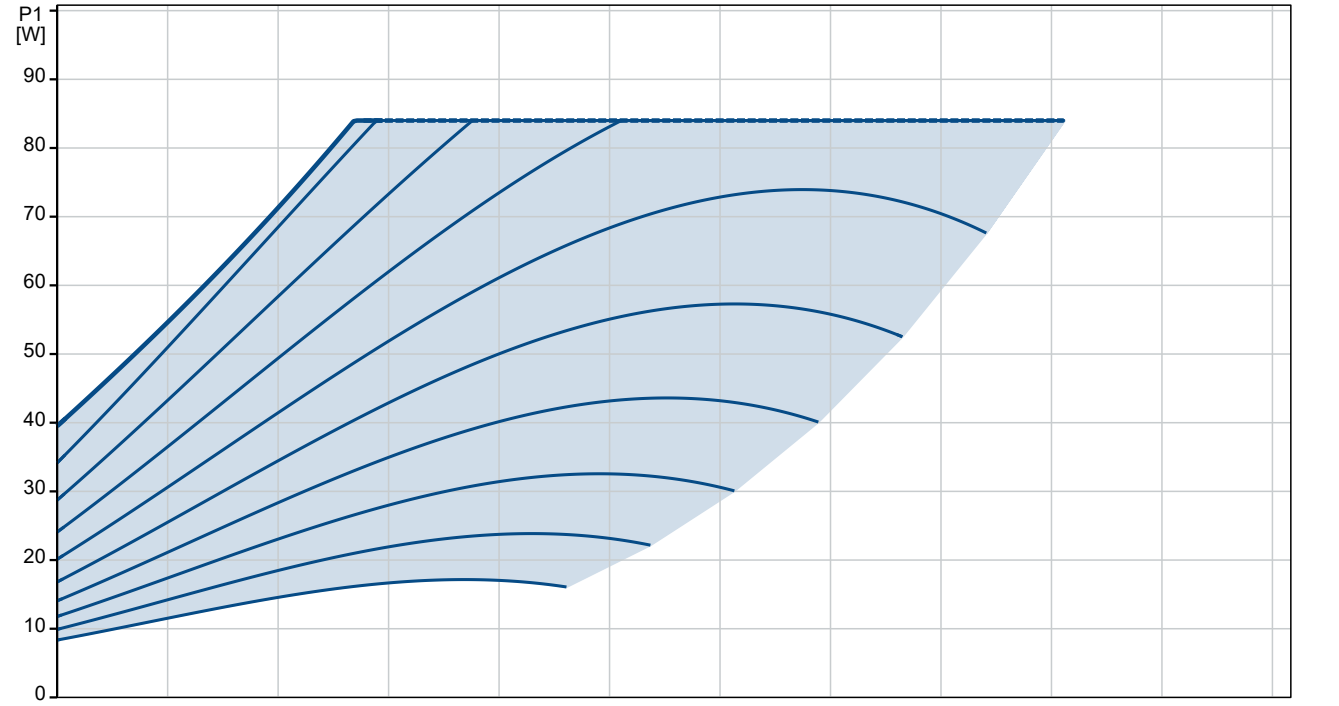

Company name:

Created by:

Phone:

Date: 11/23/2026

Description	Value
General information:	
Product name:	MAGNA3 25-60
Product No:	97924245
EAN number:	5710626493203
Technical:	
Rated flow:	4.41 m³/h
Rated head:	4.093 m
Maximum head:	60 dm
TF class:	110
Approvals:	CE,VDE,EAC,MOROCCO,UKCA RCM,UkrSEPRO
Model:	E
Materials:	
Pump housing:	Cast iron
	EN 1561 EN-GJL-200
	ASTM A48-200B
Impeller:	Composite
Installation:	
Range of ambient temperature:	0 .. 40 °C
Maximum operating pressure:	10 bar
Type of connection:	G
Size of connection:	1 1/2 inch
Pressure rating for connection:	PN 10
Port-to-port length:	180 mm
Liquid:	
Pumped liquid:	Water
Liquid temperature range:	-10 .. 110 °C
Selected liquid temperature:	20 °C
Density:	998.2 kg/m³
Electrical data:	
Maximum power input - P1:	84 W
P1 min.:	9 W
Mains frequency:	50 / 60 Hz
Rated voltage:	1 x 230 V
Minimum current consumption:	0.09 A
Maximum current consumption:	0.75 A
Maximum speed:	3510 rpm
Enclosure class (IEC 34-5):	IPX4D
Insulation class (IEC 85):	F
Others:	
Energy (EEI):	0.18
Net weight:	5.11 kg
Gross weight:	5.84 kg
Shipping volume:	0.015 m³
Danish VVS No.:	380790060
Swedish RSK No.:	5732572
Finnish LVI No.:	4615541
Norwegian NRF no.:	9042326
Environmental approvals:	CN ROHS,WEEE

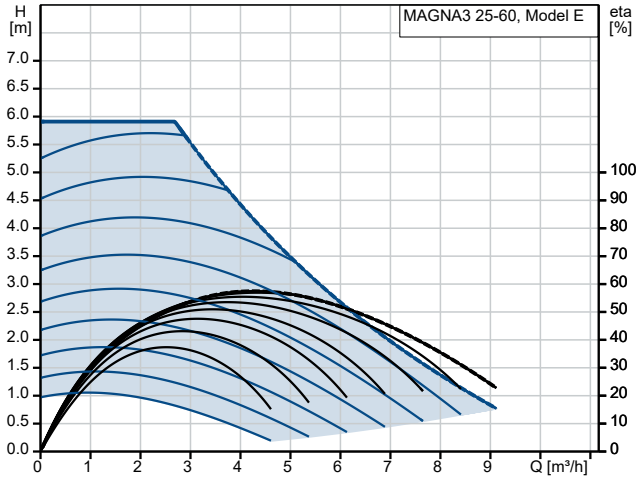

Pumped liquid = Water
Liquid temperature during operation = 20 °C
Density = 998.2 kg/m³

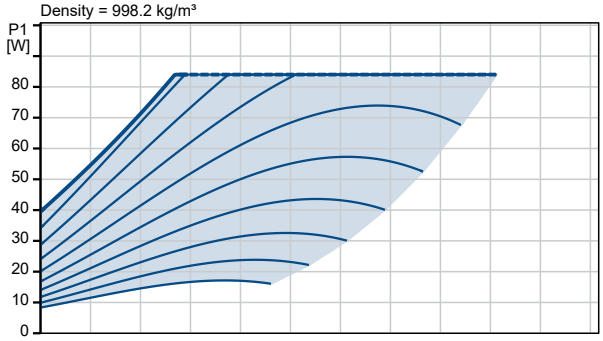

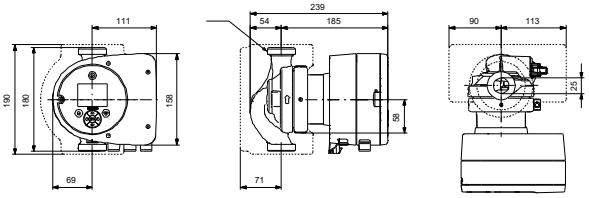

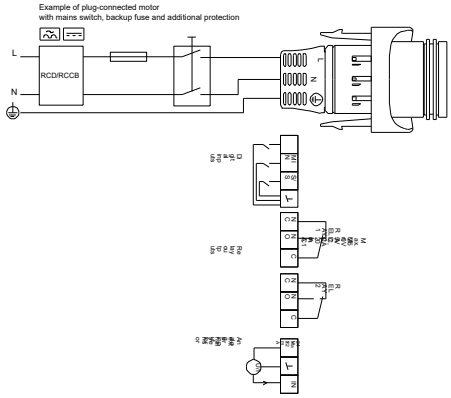

Company name:
Created by:
Phone:

Date: 11/23/2026

97924245 MAGNA3 25-60

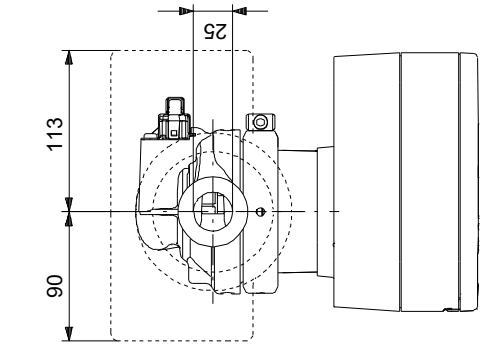

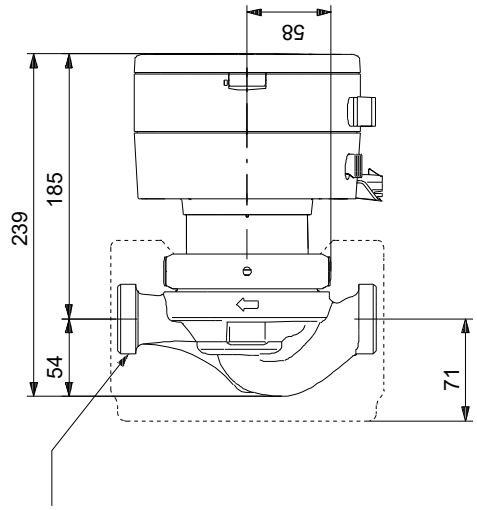

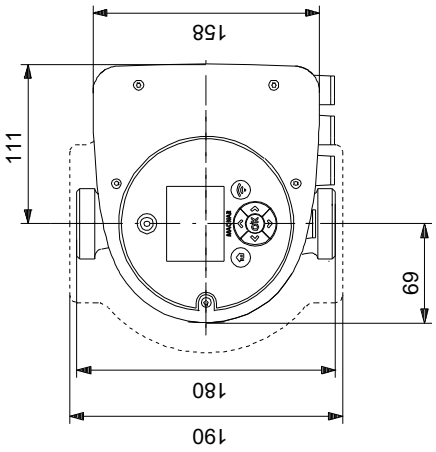

Note! All units are in [mm] unless others are stated.
Disclaimer: This simplified dimensional drawing does not show all details.