

Yonos MAXO-D 30/0,5-10 PN 10

Glandless pump circulator

Article number: 2225915

Data sheet

Hydraulic data

Maximum operating pressure *PN*	10 bar
Head max H_{max}	10.9 m
Flow max Q_{max}	10.4 m³/h
Minimum suction head at 50 °C *m*	3 m
Minimum suction head at 95 °C *m*	10 m
Minimum suction head at 110 °C	16 m
Min. fluid temperature T_{min}	-20 °C
Max. fluid temperature T_{max}	110 °C
Min. ambient temperature T_{min}	-20 °C
Max. ambient temperature T_{max}	40 °C

Motor data

Energy efficiency index (EEI) *	≤ 0.23
Mains connection	1~230 V ±10%, 50/60 Hz

Motor data

Min current I_{min}	0.1 A
Max current I_{max}	1.5 A
Rated power P_2	145 W
Min. speed n_{min}	1000 1/min
Max. speed n_{max}	4450 1/min
Power consumption P_1 min	5 W
Power consumption P_1 max	190 W
Emitted interference	EN 61800-3;2004+A1;2012 /residential area (C1)
Interference resistance	EN 61800-3;2004+A1;2012 /industrial environment (C2)

Motor data

Threaded cable connection	2 x M20x1.5
Insulation class	F
Protection class	IPX4D

* The benchmark for the most efficient circulators is EEI ≤ 0.20

Materials

Pump housing	Grey cast iron
Impeller	PPS-GF40
Shaft	Stainless steel
Bearing	Carbon, metal-impregnated

Installation dimensions

Pump connection	G 2
Pump connection (alternative designation)	RP 1 1/2 DN 30
Port-to-port length *L0*	180 mm

Equipment/function

Function

Control mode	Δp-v for variable differential pressure Δp-c for constant differential pressure Constant speed (3 speed stages)
Multi pump operation	Main/Standby
Display	Setpoint

Equipment

Approvals and labels	CE VDE EAC
Display	LED segment display
Display information	Basic Versio n: LED display (small) for showing the set head or speed stage.
Pump control	Electronic-controlled pump
Quick electrical connection	Wilo plug
Radio standard Bluetooth	no

Connectivity

Digital input	Ext. OFF (via accessories Wilo-Connect module Yonos MAXO)
Digital output	SSM SSM/SBM (via accessories Connect module Yonos MAXO)

Pump curves

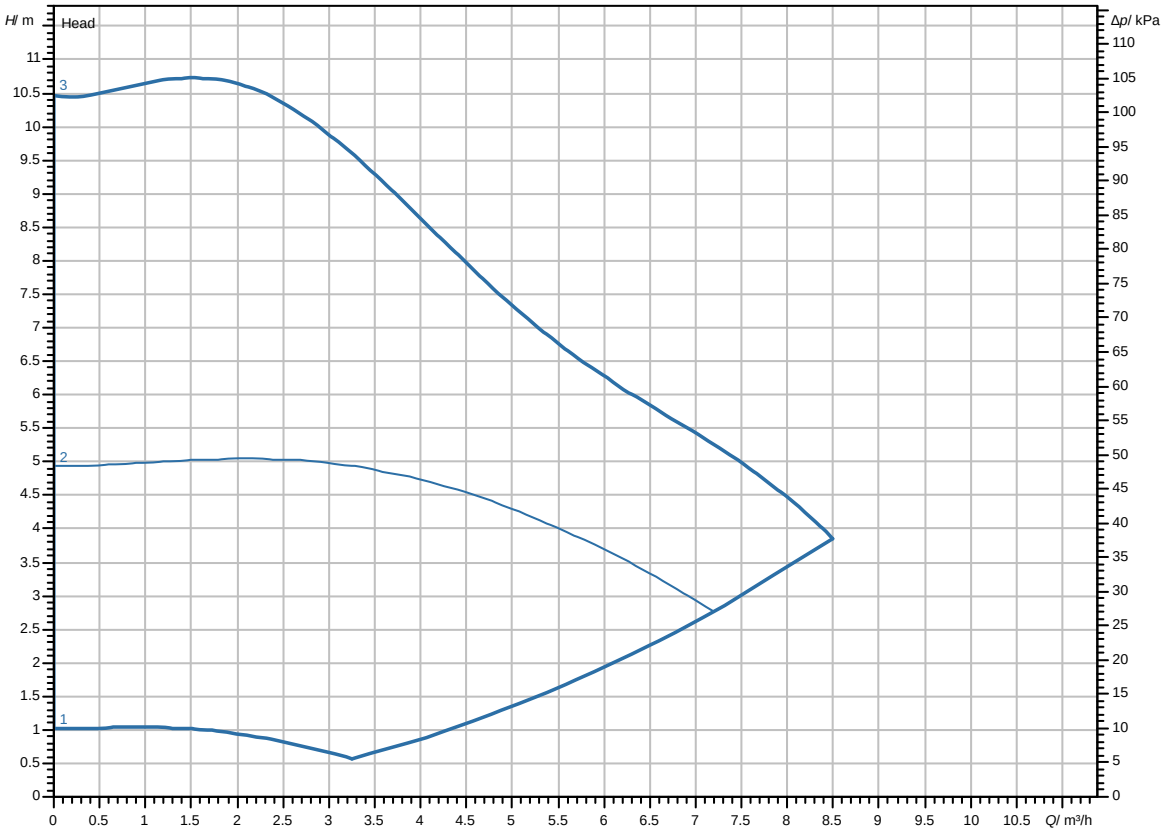

Dimensions and dimensions drawings

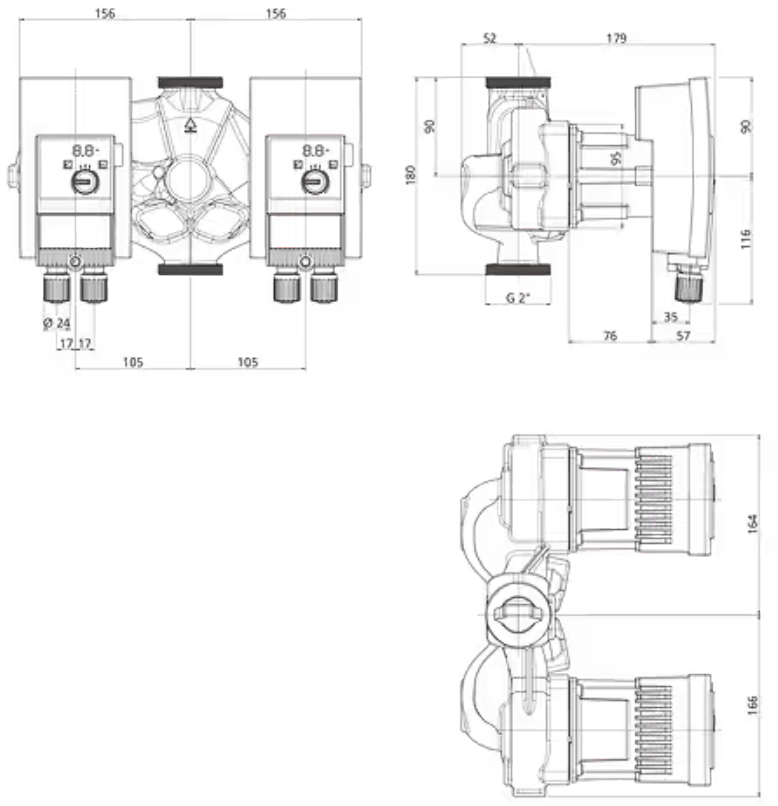

Wiring diagram

1~230V, 50/60 Hz

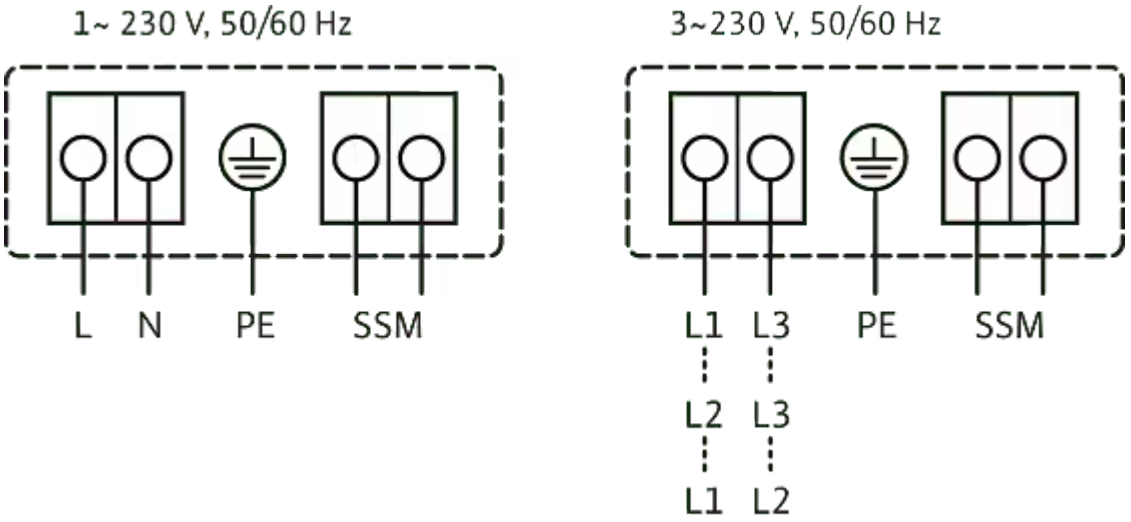

SSM: Collective fault signal
(NC contact in accordance with VDI 3814, load capacity 1 A, 250 V ~)

Standard: 1~230 V, 50/60 Hz
Option: 3~230 V, 50/60 Hz

Ordering information

Product data

Brand	Wilo
Product description	Yonos MAXO-D 30/0,5-10 PN 10
Article number	2225915
EAN number	4062679283838
Colour	green/black
Minimum order quantity	1
Date of sales availability	2023-10-15

Packaging

Packaging type	Cardboard box
Packaging property	Transport packaging
Pieces per pallet	8
Number per layer	4

Dimension, weight

Length with packaging	400 mm
Length *L*	206 mm

Dimension, weight

Height with packaging	600 mm
Height *H*	231 mm
Width with packaging	394 mm

Dimension, weight

Width *W*	330 mm
Gross weight, approx. *m*	14 kg
Net weight, approx. *m*	12.5 kg

Tender text

High-efficiency pump Wilo-Yonos MAXO-D, electronically controlled. Glandless twin-head pump, synchronous motor according to ECM technology and integrated power control for continuous differential pressure control. Can be used for all heating, ventilation and air-conditioning applications.

Each pump can be operated in individual operation (main/standby operation). The connection module Yonos MAXO can be used for automatic fault-actuated switchover.

Standard-equipped with:

- Preselectable control modes for optimum load adjustment: Δp-c (constant differential pressure), Δp-v (variable differential pressure)
- 3 speed stages (n = constant)
- LED for setting the setpoint and displaying error messages
- Electrical connection with the Wilo plug
- Fault lamp and contact for collective fault signal

For flange-end pumps - flange versions:

- Standard version for DN 32 to DN 65 pumps: PN 6/10 combination flange (PN 16 flange according to EN 1092-2) for PN 6 and PN 16 counter flanges
- Standard version for DN 80/DN 100 pumps: PN 6 flange (designed for PN 16 according to EN 1092-2) for PN 6 counter flange

Operating data

Min. fluid temperature T_{min}	-20 °C

Max. fluid temperature T_{max}	110 °C
Min. ambient temperature T_{min}	-20 °C
Max. ambient temperature T_{max}	40 °C
Maximum operating pressure *PN*	10 bar
Minimum suction head at 50 °C *m*	3 m
Minimum suction head at 95 °C *m*	10 m
Minimum suction head at 110 °C	16 m

Motor data

Energy efficiency index (EEI) *	≤ 0.23
Mains connection	1~230 V ±10%, 50/60 Hz
Min current I_{min}	0.1 A
Max current I_{max}	1.5 A
Rated power P_2	145 W
Min. speed n_{min}	1000 1/min
Max. speed n_{max}	4450 1/min
Power consumption $P_{1\ min}$	5 W

Motor data

Power consumption $P_{1\ max}$	190 W
Emitted interference	EN 61800-3;2004+A1;2012 /residential area (C1)
Interference resistance	EN 61800-3;2004+A1;2012 /industrial environment (C2)
Insulation class	F
Protection class	IPX4D
Threaded cable connection	2 x M20x1.5

* The benchmark for the most efficient circulators is EEI ≤ 0.20

Materials

Pump housing	Grey cast iron
Impeller	PPS-GF40
Shaft	Stainless steel
Bearing	Carbon, metal-impregnated

Installation dimensions

Pump connection	G 2
Pump connection (alternative designation)	RP 1 1/2 DN 30
Port-to-port length *L0*	180 mm

Ordering information

Brand	Wilo
Product description	Yonos MAXO-D 30/0,5-10 PN 10
Net weight, approx. *m*	12.5 kg
Article number	2225915