

Similar to figure

Stratos MAXO 25/0,5-12 PN 10

Glandless pump circulator

Article number: 2164571

Data sheet

Hydraulic data

Maximum operating pressure *PN*	10 bar
Head max H_{max}	12.4 m
Flow max Q_{max}	12.4 m³/h
Minimum suction head at 50 °C *m*	3 m
Minimum suction head at 95 °C *m*	10 m
Minimum suction head at 110 °C	16 m
Min. fluid temperature T_{min}	-10 °C
Max. fluid temperature T_{max}	110 °C
Min. ambient temperature T_{min}	-10 °C
Max. ambient temperature T_{max}	40 °C

Motor data

Energy efficiency index (EEI) *	≤ 0.19

Motor data

Mains connection	1~230 V ±10%, 50/60 Hz
Min current I_{min}	0.11 A
Max current I_{max}	1.28 A
Rated power P_2	262 W
Min. speed n_{min}	750 1/min
Max. speed n_{max}	4350 1/min
Power consumption $P_{1\ min}$	7 W
Power consumption $P_{1\ max}$	295 W
Emitted interference	EN 61800-3;2004+A1;2012 /residential area (C1)

Motor data

Interference resistance	EN 61800-3;2004+A1;2012 /industrial environment (C2)
Insulation class	F
Protection class	IPX4D
Threaded cable connection	5 x M16x1.5

* The benchmark for the most efficient circulators is EEI ≤ 0.20

Installation dimensions

Pump connection	G 1½
Pump connection (alternative designation)	RP 1 DN 25
Port-to-port length *L0*	180 mm

Materials

Pump housing	Grey cast iron
Impeller	PPS-GF40
Shaft	1.4122, DLC-coated
Bearing	Carbon-graphite

Equipment/function

Function

Control mode	Δp-v for variable differential pressure Δp-c for constant differential pressure Q limit for limiting the maximum volume flow Dynamic Adapt plus ΔT-const. for constant differential temperature control T-const. for constant temperature control Constant Q for constant volume flow control Multi Flow Adaptation Δ T-const. for constant differential temperature control User-defined PID control Constant speed (n-const.)

Function

Special features of the series	Heating/Cooling switching Night set back Heat quantity measurement Cooling quantity measurement Key locking function No-Flow Stop Reset function to factory setting Adjustable volume flow limiter Ability to save and restore configured pump settings (3 restoration points) Fault message and warning message in plain text including suggested remedy

Function

Multi pump operation	Main/Standby Parallel operation
Measurement value logging	Heat and cooling capacity measurement
Display	Setpoint Actual delivery head Actual volume flow Actual power consumption Energy consumption Temperature (version “-R7”: current fluid temperature possible with Stratos MAXO temperature sensor) Warning messages in plain text (display status: yellow) Error messages in plain text (display: red) Pump venting (display status: blue) Control mode Active influences (e.g. STOP)
Display (can also be selected)	Speed Heating quantity Cooling quantity Operating hours Mains voltage Warning message Error message
Pump venting function	Yes

Equipment

Approvals and labels	CE VDE EAC
Cold water insulation shell	As accessories

Equipment

Display	Graphic colour display (4.3 inches)
Display information	Comfort Version: LCD display (large) for showing the head, flow volume, actual und cumulated current.
Pump control	Electronic-controlled pump
Quick electrical connection	Wilo Connector
Thermal insulation shell	Yes
Blocking-current proof motor	yes
Particle filter	yes
Key lock	yes
Radio standard Bluetooth	yes

Connectivity

Access via the Wilo-Assistant app	Yes
Analogue signal as standard	0-10 V 2-10 V 4-20 mA 0-20 mA PT1000

Connectivity

Bus communication via additional accessories	BACnet MS/TP LON Modbus RTU CANopen PLR BACnet IP Modbus TCP
Connection for Wilo-Smart Cloud	Via Wilo-Smart Gateway

Connectivity

Digital input	Ext. OFF Ext. MIN Ext. MAX MANUAL (BMS-OFF) Key lock Switchover between heating/cooling mode
Digital output	SSM SBM
wire data exchange and remote operation	Bluetooth (depending on type)

Pump curves

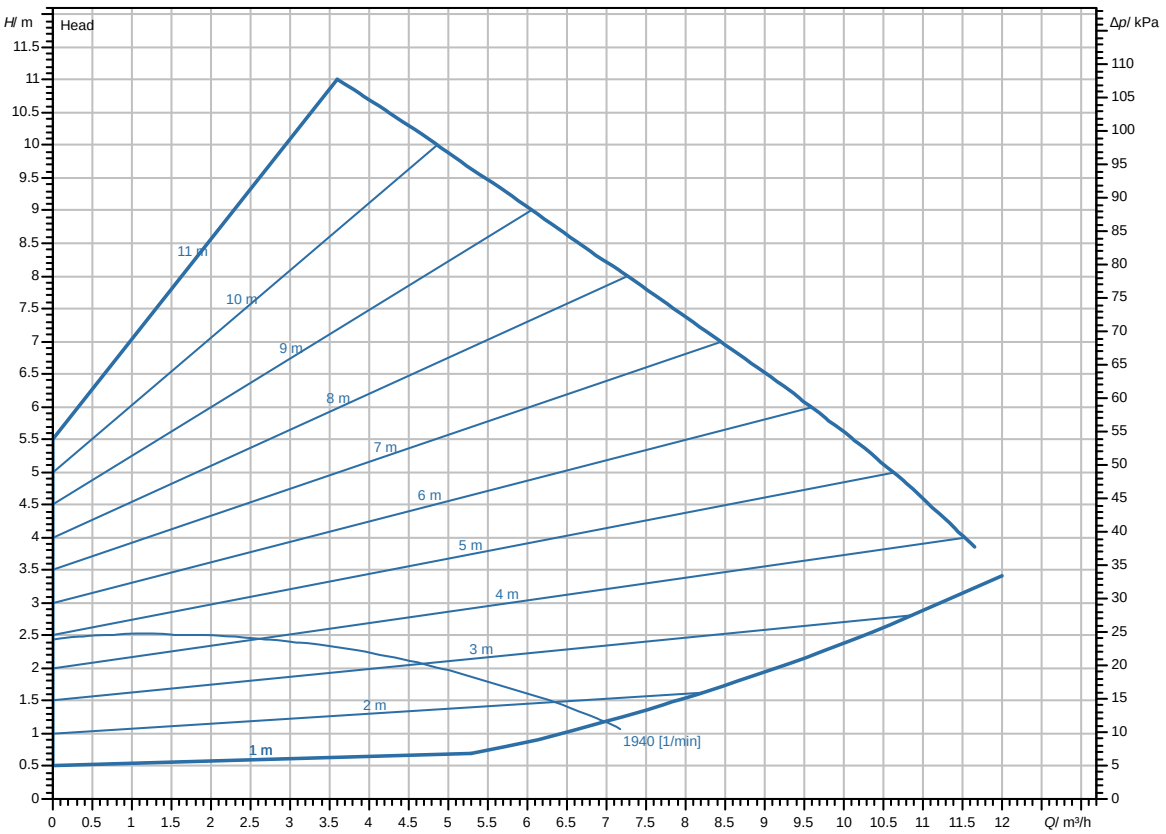

Dimensions and dimensions drawings

Stratos MAXO 25/0,5-12 PN 10

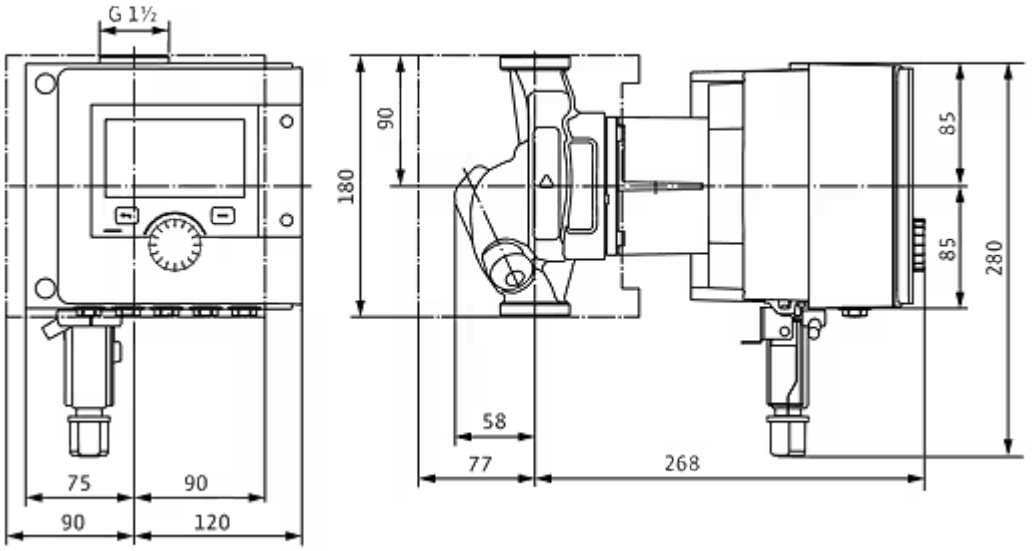

Wiring diagram

Standard: 1~ 230 V, 50/60 Hz, Option: 3~ 230 V, 50/60 Hz

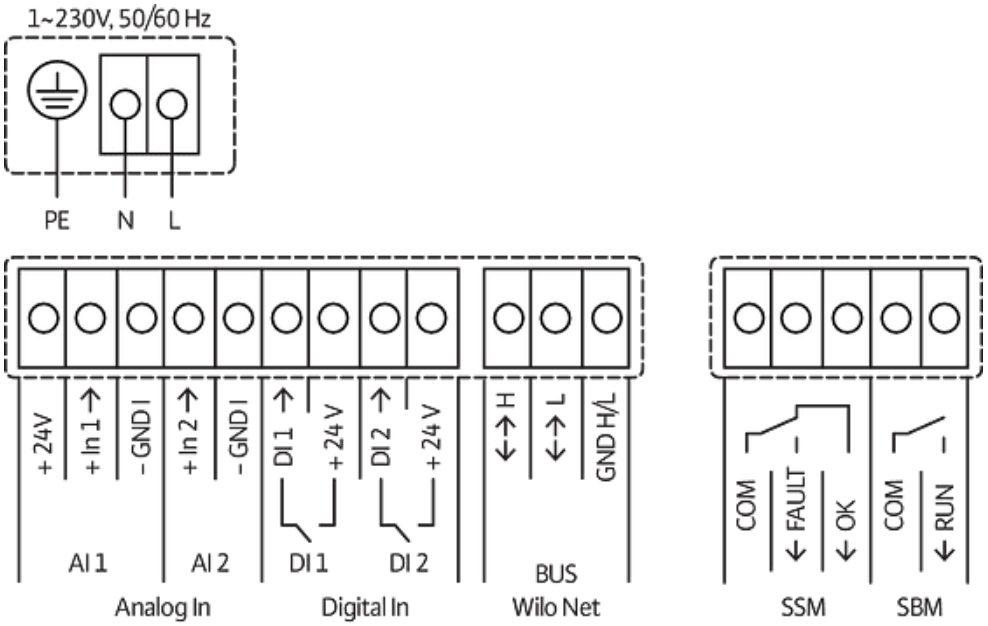

SSM: Collective fault signal (NC contact in accordance with VDI 3814, load capacity 1 A, 250 V ~)

Ordering information

Product data

Brand	Wilo
Product description	Stratos MAXO 25/0,5-12 PN 10
Article number	2164571
EAN number	4048482699400
Colour	Green/black/silver
Minimum order quantity	1
Date of sales availability	2018-11-01
Previous model article number	2104941 2217896
Previous model designation	Stratos 25/1-12 PN 10 Stratos MAXO 25/0,5-12 PN10-R7

Packaging

Packaging type	Cardboard box
Packaging property	Transport packaging
Pieces per pallet	32
Number per layer	8

Dimension, weight

Length with packaging	400 mm
Length *L*	350 mm
Height with packaging	263 mm
Height *H*	180 mm
Width with packaging	300 mm
Width *W*	210 mm
Gross weight, approx. *m*	8.6 kg
Net weight, approx. *m*	7.5 kg

Tender text

Wilo-Stratos MAXO premium smart-pump

High-efficiency pump as glandless pump with EC motor and electronic power adjustment. Can be used for heating water, chilled water and water/glycol mixtures. Energy efficiency index (EEI) between ≤ 0.17 and ≤ 0.19 depending on pump type.

Control modes:

- Permanent, automatic performance adjustment to system requirements without setpoint specification **Wilo Dynamic Adapt plus** (factory setting).
- Constant temperature **(T-const.)**
- Constant differential temperature **(dT-const.)**
- Needs-based volume flow optimisation of the feeder pump through connectivity and communication between multiple pumps **(Multi-Flow Adaptation).**
- Constant volume flow **(Q-const.)**
- Differential pressure control (dp-c) at a remote point in the pipe network **(index circuit evaluator)**
- Constant differential pressure **(dp-c)**
- Variable differential pressure **(dp-v)** with the option to set the nominal duty point
- Constant speed **(n-const.)**
- User-defined **PID** control

Functions:

- Heat quantity measurement
- Cooling quantity measurement
- Pump automatically deactivates when no flow rate is detected **(No-Flow Stop)**
- Switchover between heating and cooling mode (automatic, external or manual)
- Adjustable volume flow limiter using the Q-Limit function **($Q_{min.}$ and $Q_{max.}$)**
- Dual-pump operating modes: Efficiency-optimised **parallel operation** for dp-c and dp-v, main/standby mode
- Ability to save and restore configured pump settings **(3 restoration points)**
- **Fault and warning messages** displayed in plain text with advice on resolving the issue
- **Pump venting function** for automatic venting of the rotor chamber
- Automatic **night setback**
- Automatic **deblocking function** and integrated **full motor protection**
- **Dry-running detection**

Display:

- Control mode
- Setpoint
- Volume flow
- Temperature
- Power consumption
- Electrical energy consumption
- Active influences (e.g. STOP, No-Flow Stop)

Version:

- **2** configurable **analogue inputs**: 0-10 V, 2-10 V, 0-20 mA, 4-20 mA and commercially available Pt1000; +24 V DC power supply
- **2** configurable **digital inputs** (Ext. OFF, Ext. Min, Ext. Max, heating/cooling, manual override (uncoupled from building automation), operation lock (key lock and remote operation configuration protection))
- **2** configurable **signal relays** for **run signals and fault messages**
- **Slot for Wilo-CIF modules** with interfaces for building automation BA (optional accessories: CIF modules Modbus RTU, Modbus TCP, BACnet MS/TP, BACnet IP, LON, PLR, CANopen)
- Wilo Net as a Wilo system bus for communication between Wilo products, e.g. **Multi-Flow Adaptation**; dual-pump operation and Wilo-Smart Gateway
- **Integrated temperature sensor**
- Automatic **emergency operation** with configurable pump speed for exceptional conditions, e.g. if bus communication fails or sensor values are unavailable
- **Colour graphics display** (4.3 inches) with one button manual operation level
- Use the Wilo-Assistant app to read and set operating data and – among other things – set up a commissioning protocol through the Bluetooth interface (no further accessories required)
- Integrated **dual-pump management** (twin-head pumps are prewired) when using 2 single pumps as a dual-pump unit, connection via Wilo Net
- Cable break detection when using an analogue signal (in connection with 2 – 10 V or 4 – 20 mA)
- Outdoor installation with weather protection possible in accordance with the installation and operating instructions
- Pre-set date and time
- Thermal insulation shell for heating applications

Scope of delivery

- Pump
- Optimised Wilo-Connector the same for all sizes
- 2x threaded cable gland M16 x 1.5
- Washers for flange screws M12 and M16 (for nominal connection diameters DN 32 to DN 65)
- 2x gaskets for threaded connection
- Thermal insulation shell
- Installation and operating instructions

Optional accessories:

- ClimaForm cold insulation to avoid the formation of condensate
- CIF module: Modbus TCP, Modbus RTU, BACnet IP, BACnet MS/TP, LON, PLR, CANopen
- Pt1000 (B) pipe surface contact sensor (for domestic hot water)
- Pt1000 (AA) sensor for installation in immersion sleeve
- Differential pressure sensor

Operating data

Min. fluid temperature T_{min}	-10 °C
Max. fluid temperature T_{max}	110 °C

Min. ambient temperature T_{min}	-10 °C
Max. ambient temperature T_{max}	40 °C
Maximum operating pressure *PN*	10 bar
Minimum suction head at 50 °C *m*	3 m
Minimum suction head at 95 °C *m*	10 m
Minimum suction head at 110 °C	16 m

Motor data

Energy efficiency index (EEI) *	≤ 0.19
Mains connection	1~230 V ±10%, 50/60 Hz
Min current I_{min}	0.11 A
Max current I_{max}	1.28 A
Rated power P_2	262 W
Min. speed n_{min}	750 1/min
Max. speed n_{max}	4350 1/min
Power consumption P_1 min	7 W
Power consumption P_1 max	295 W

Motor data

Emitted interference	EN 61800-3;2004+A1;2012 /residential area (C1)
Interference resistance	EN 61800-3;2004+A1;2012 /industrial environment (C2)
Insulation class	F
Protection class	IPX4D
Threaded cable connection	5 x M16x1.5

* The benchmark for the most efficient circulators is EEI ≤ 0.20

Materials

Pump housing	Grey cast iron
Impeller	PPS-GF40
Shaft	1.4122, DLC-coated
Bearing	Carbon-graphite

Installation dimensions

Pump connection	G 1½
Pump connection (alternative designation)	RP 1 DN 25
Port-to-port length *L0*	180 mm

Ordering information

Brand	Wilo
Product description	Stratos MAXO 25/0,5-12 PN 10
Net weight, approx. *m*	7.5 kg
Article number	2164571