PRODUCT DATA SHEET

Ebara EVMS-K1 18F5 Q1BEG E/1.1 MT Multistage Pump 28151100185

SKU	28151100185
Manufacturer	EBARA Pumps Europe S.p.A.
Configuration	EVMS vertical multistage pump with on-board E-SPD+ inverter and pressure transducer
Pump model (EBARA)	EVMS-K1 18F5 Q1BEG
Pipe connection	Round flange (F)
Inverter	E-SPD+ MT inverter - 230 V single-phase supply

CONTENTS

2	Product specification - pump with inverter	Ebara Data Book EVMS-K 50Hz (rev.D), p.10
3	Type key	Ebara Data Book EVMS-K 50Hz (rev.D), p.8
4	Performance curve - EVMS-K1 18/1.1	Ebara Data Book EVMS-K 50Hz (rev.D), p.21
5	Overall dimensions - EVMS(L)-K1 *	Ebara Data Book EVMS-K 50Hz (rev.D), p.85
6	Construction - pump with inverter	Ebara Data Book EVMS-K 50Hz (rev.D), p.84
7	Pump technical data - materials	Ebara Data Book EVMS-K 50Hz (rev.D), p.11
8	Motor data	Ebara Data Book EVMS-K 50Hz (rev.D), p.12
9	Mechanical seal data	Ebara Data Book EVMS-K 50Hz (rev.D), p.13
10	E-SPD+ inverter specification	Ebara Data Book EVMS-K 50Hz (rev.D), p.100

* Rows or curves for this model are highlighted in yellow on these pages.

Technical content reproduced from EBARA Pumps Europe published documentation (sources listed above). EBARA reserves the right to make changes without prior notice.

PRODUCT SPECIFICATIONS

PUMP WITH INVERTER

PUMP WITH INVERTER							
Version		**EVMS(.)-K**					
Operating range	Nominal flow rate (m3/h)	1	3	5	10	15	20
	Maximum working pressure	16 bar / 25 bar			16 bar		
	Liquid temperature range	-30°C÷135°C					
	Ambient operating temperature (no higher than 1000 m above sea level)	-10°C÷40°C					
Pump	EVMS	●	●	●	●	●	●
	EVMSL	○	○	○	○	○	○
	EVMSG	○	○	○	○	○	○
Motor	ETM	From 0.75 to 4 kW					
Control	Pressure transmitter	Up to 16 bar EN 10088-1.4301 (AISI 304) / 1.4404 (AISI 316L)					
		Upper 16 bar to 25 bar EN 10088-1.4301 (AISI 304) / 1.4404 (AISI 316L)			-		
Inverter	E-SPD+	Single-phase Supply inverter up to 2.2 kW					
		Three-phase Supply inverter up to 4 kW					

● : Standard ○ : Optional

EBARA
EBARA Pumps Europe
EBARA Pumps Europe reserves the right to make changes without prior notice

TYPE KEY

EVMS-K

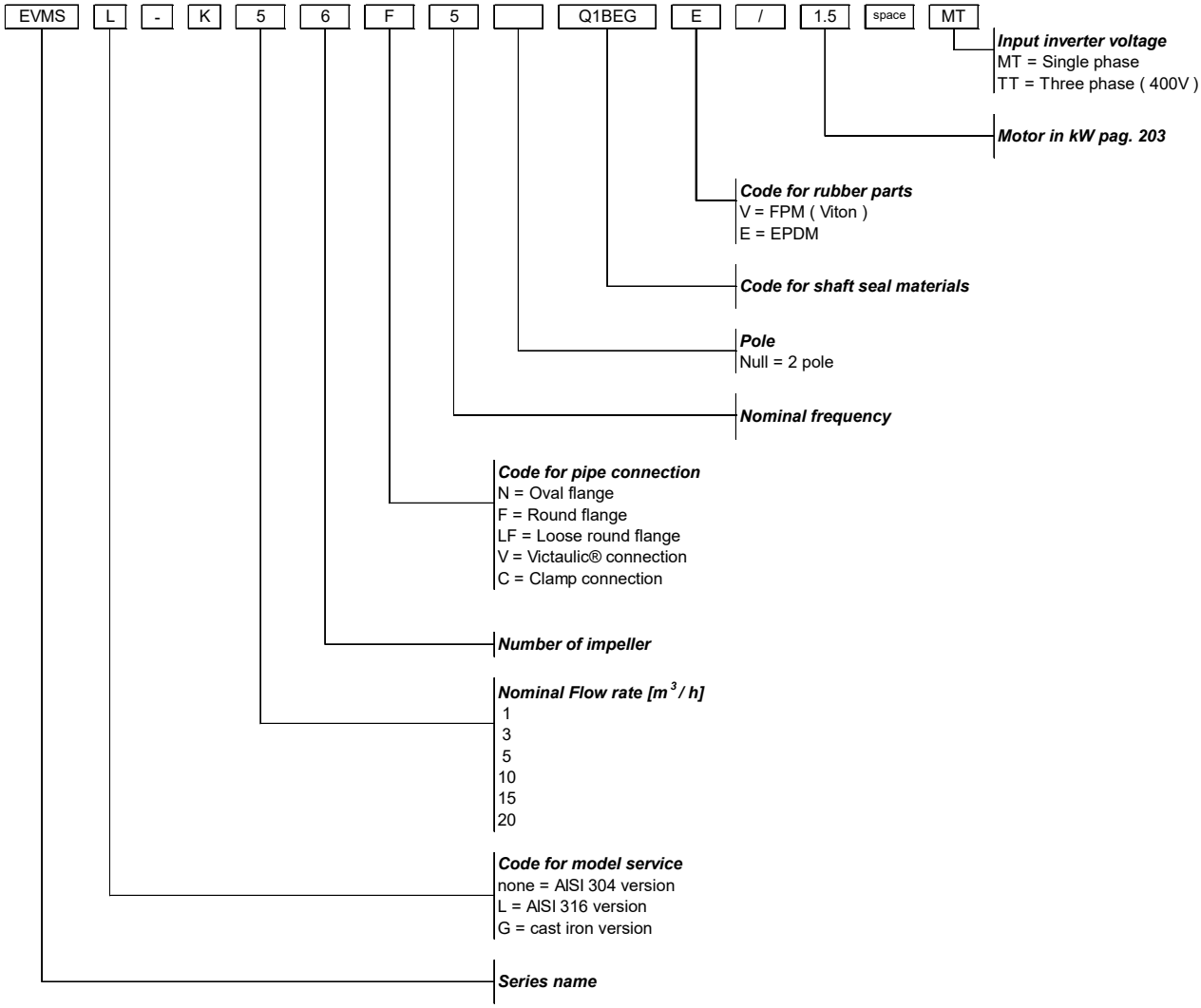

EBARA Pumps Europe
EBARA Pumps Europe reserves the right to make changes without prior notice

EVMS(.)-K1 18/1.1

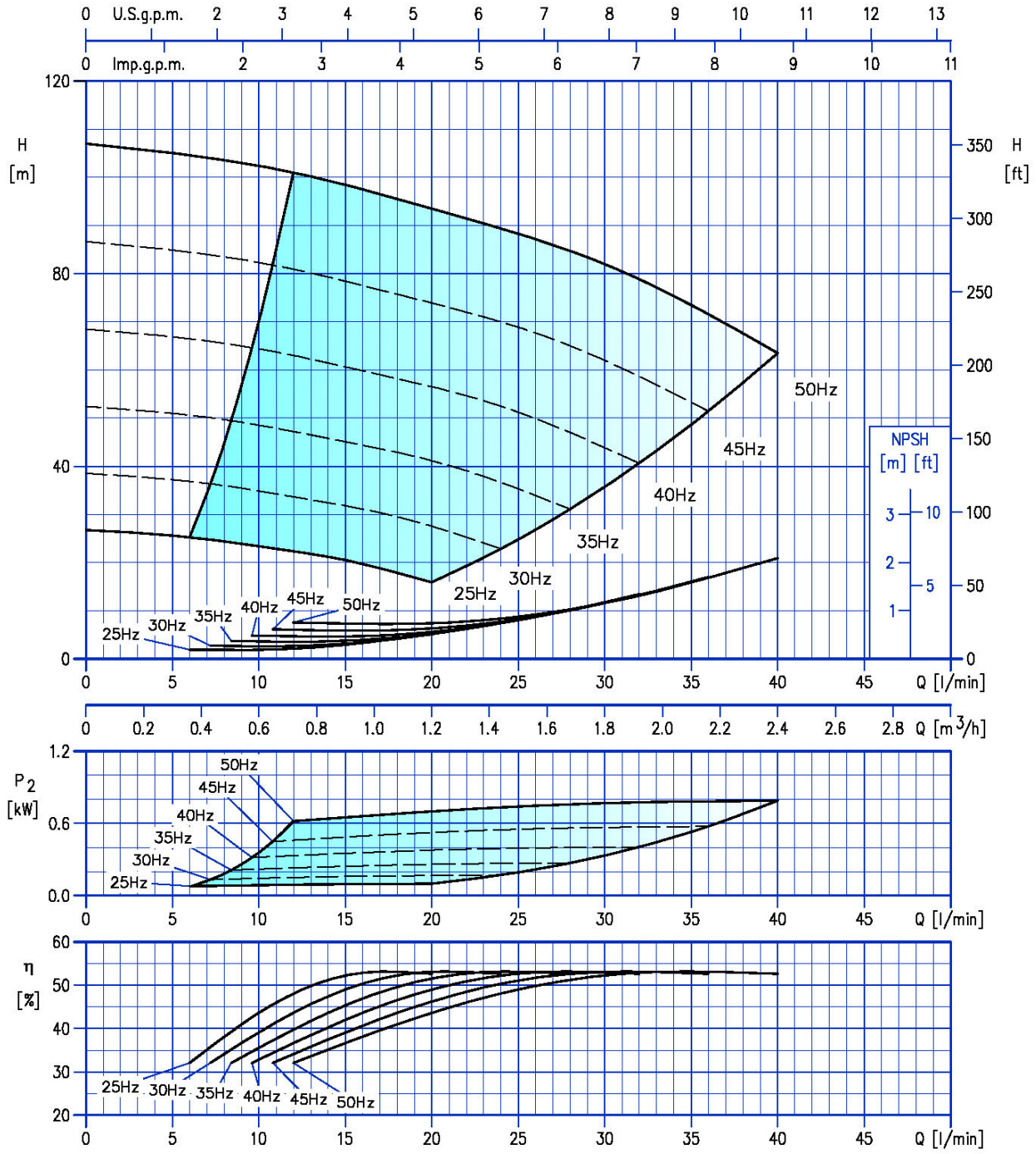

Test standard: ISO 9906: 2012 - Grade 3B

EBARA
EBARA Pumps Europe
EBARA Pumps Europe reserves the right to make changes without prior notice

EVMS-K

DIMENSION AND WEIGHT

OVERALL DIMENSIONS PUMP WITH INVERTER

EVMS(L)-K1

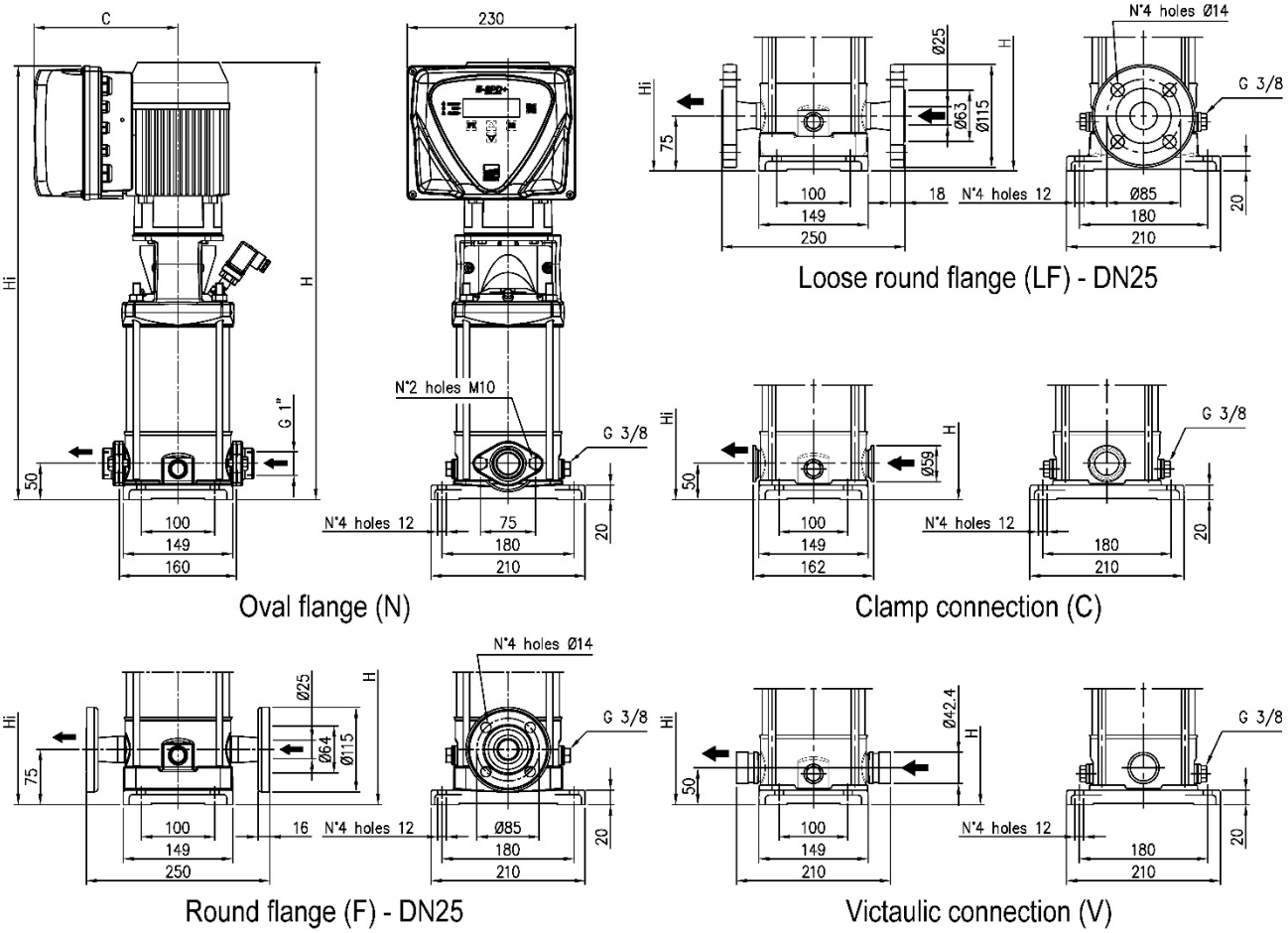

Pump with Inverter	kW	C	Dimensions [mm]								
			Oval flange (N)			Victaulic® connection (V) Clamp connection (C)			Loose Round flange (LF) Round flange (F)		
			H	Hi	Weight [kg]	H	Hi	Weight [kg]	H	Hi	Weight [kg]
EVMS(L)-K1 14/0.75 (.)T	0.75	191	745	740	26.9	745	740	26.9	770	765	27.6
EVMS(L)-K1 16/0.75 (.)T	0.75	191	787	782	27.9	787	782	27.9	812	807	28.6
EVMS(L)-K1 18/1.1 (.)T	1.1	191	840	824	30.5	840	824	30.5	865	849	31.2
EVMS(L)-K1 20/1.1 (.)T	1.1	191	882	866	31.5	882	866	31.5	907	891	32.2
EVMS(L)-K1 22/1.1 (.)T	1.1	191	924	908	32.7	924	908	32.7	949	933	33.4
EVMS(L)-K1 24/1.1 (.)T	1.1	191	966	950	33.7	966	950	33.7	991	975	34.4
EVMS(L)-K1 26/1.1 (.)T	1.1	191	1008	992	34.7	1008	992	34.7	1033	1017	35.4
EVMS(L)-K1 27/1.5 (.)T	1.5	203	-	-	-	1086	1041	38.6	1111	1066	39.3
EVMS(L)-K1 29/1.5 (.)T	1.5	203	-	-	-	1128	1083	39.6	1153	1108	40.3
EVMS(L)-K1 32/1.5 (.)T	1.5	203	-	-	-	1191	1146	40.9	1216	1171	41.6
EVMS(L)-K1 34/1.5 (.)T	1.5	203	-	-	-	1233	1188	41.8	1258	1213	42.5
EVMS(L)-K1 37/2.2 (.)T	2.2	203	-	-	-	1296	1250	44.7	1321	1275	45.4
EVMS(L)-K1 39/2.2 (.)T	2.2	203	-	-	-	1338	1293	45.7	1363	1318	46.4

- : not avable model

EBARA
EBARA Pumps Europe
EBARA Pumps Europe reserves the right to make changes without prior notice

PUMP WITH INVERTER CONSTRUCTION

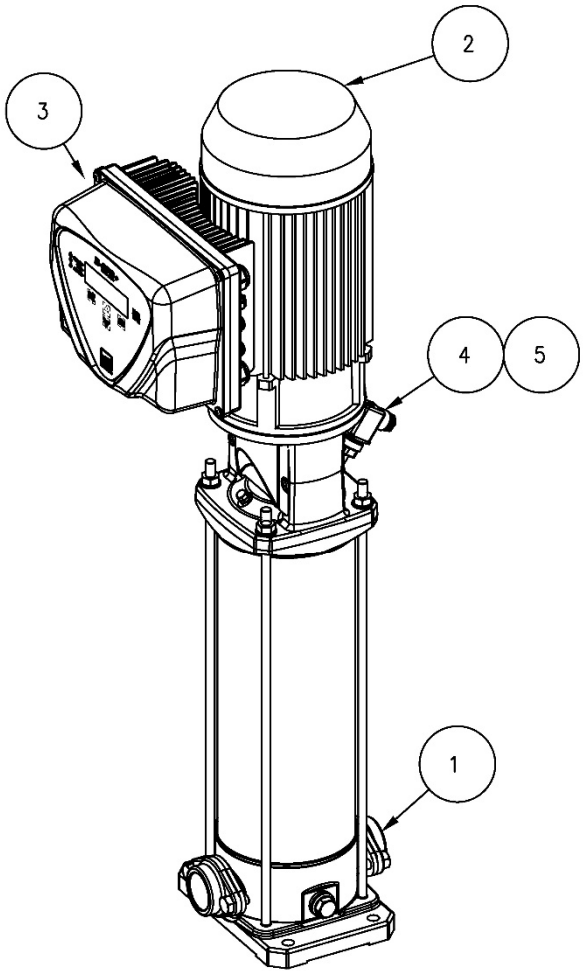

Oval flange (N)

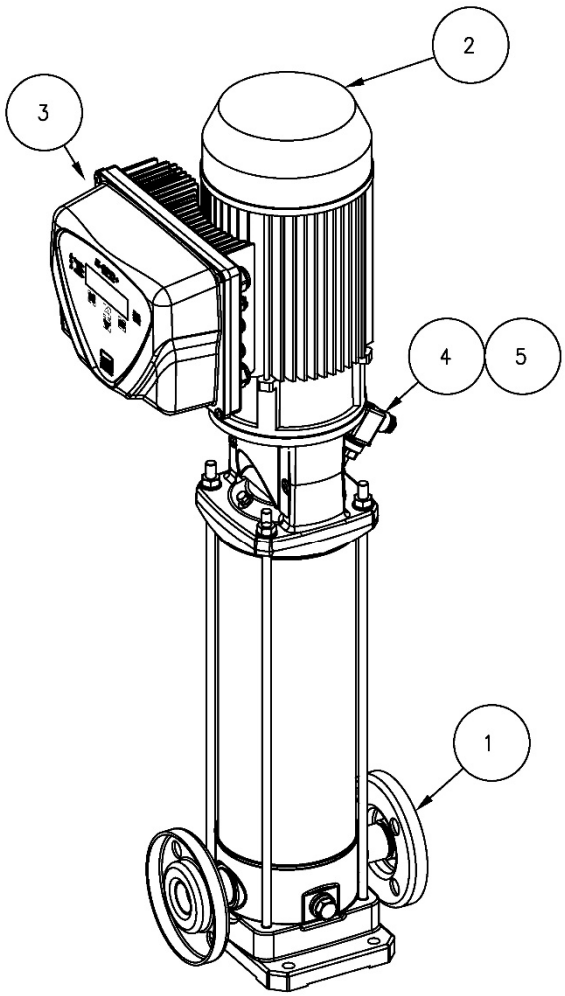

Round flange (F)

N°	PART NAME	Quantity
1	Pump	1
2	Electric motor	1
3	E-SPD+	1
4	Pressure transducer [1]	1
5	Stainless steel reducer [2]	1

[1] Only electrically connected
[2] Not assembled

EBARA Pumps Europe reserves the right to make changes without prior notice

EVMS-K

TECHNICAL DATA

TECHNICAL PUMP DATA

EVMS(.) 1-3-5-10-15-20

PUMP																				
Version			EVMSG						EVMS						EVMSL					
Operating range	Nominal flow rate (m3/h)		1	3	5	10	15	20	1	3	5	10	15	20	1	3	5	10	15	20
	Maximum working pressure		16 bar / 25 bar																	
	Liquid temperature range		-30°C÷140°C [1]																	
Key Components Material	Impeller		EN 1.4301 (AISI 304)												EN 1.4404 (AISI 316L)					
	Intermediate casing		EN 1.4301 (AISI 304)												EN 1.4404 (AISI 316L)					
	Liner ring		EN 1.4301 (AISI 304) + PPS												EN 1.4301 (AISI 304) + PPS					
	Bottom casing		Cast iron						EN 1.4301 (AISI 304)						EN 1.4404 (AISI 316L)					
	Casing cover		EN 1.4301 (AISI 304)												EN 1.4404 (AISI 316L)					
	Shaft	EN 1.4301 (AISI 304)	EVMSG / EVMS 1-3-10 . EVMSG / EVMS 5-15-20 (depend on models)																	
		EN 1.4404 (AISI 316L)	EVMSL 1-3-10 . EVMSL 5-15-20 (depend on models)																	
		EN 1.4462 (AISI 329A)	EVMSG / EVMS / EVMSL 5-15-20 (depend on models)																	
	Shaft sleeve bearing		Tungsten carbide																	
	Shaft seal		See the shaft seal options																	
	O-ring	EPDM	●	●	●	●	●	●	●	●	●	●	●	●	●	●	●	●	●	●
		FPM	●	●	●	●	●	●	●	●	●	●	●	●	●	●	●	●	●	●
	Outer casing		EN 1.4301 (AISI 304)												EN 1.4404 (AISI 316L)					
	Motor Bracket		Cast iron																	
	Tie rod		Galvanized steel 6.8 strenght class ISO 898/1																	
	Coupling		Die cast aluminium																	
	Base		Cast Iron						Die cast aluminium											
Pipe Connetion	Oval Flange	Up to 16 bar	○	○	○	○	○	○	●	●	●	●	●	●	○	○	○	○	○	○
	Round Flange (DIN)	Up to 16 bar	○	○	○	○	○	○	○	○	○	○	○	○	○	○	○	○	○	○
		From 16 bar to 25 bar	○	○	○	○	○	○	●	●	●	●	●	●	○	○	○	○	○	○
	Loose round Flange (DIN)	Up to 16 bar	-	-	-	-	-	○	○	○	○	○	○	○	○	○	○	○	○	○
		From 16 bar to 25 bar	-	-	-	-	-	○	○	○	○	○	○	○	○	○	○	○	○	○
	Victaulic®	Up to 16 bar	-	-	-	-	-	○	○	○	○	○	○	○	○	○	○	○	○	○
	Clamp	Up to 16 bar	-	-	-	-	-	○	○	○	○	○	○	○	○	○	○	○	○	○

● : Standard ○ : Optional
[1] : Verify the compatibly with the pressure trasmitter used.
- : Not available

EBARA Pumps Europe reserves the right to make changes without prior notice

TECHNICAL MOTOR DATA

ETM MOTOR

ETM MOTOR		
Version		**EVMS(.)**
Power source	Frequency	50 Hz
	Phase	Three-phase
	Rotation speed	2900 min-1
	Power rating	0.75 ÷ 4 kW
		1.0 ÷ 5.5 HP
	Voltage	230/400 ± 10% V
Type	Type	Electric - TEFC
	Efficiency level	IE3
	N°of poles	2
	Protection degree	IP 55
	Insulation class	F (temperature rise class B)
Others	Thermal Protection	PTC sensor pre-installed for motors of 1.5 kW and above
	Casing Material	Aluminium
	Flange mount (IEC motor)	IM B14 (up to 4 kW)
	Terminal Box fixing	Unlosable screw and sealing from 0.75 ÷ 4 kW

Motor Model	Motor Size	Motor Coupling Flange Size	Motor Power [kW]	Motor Power [HP]	Eff.	Load efficency and power-factor (400V) η % 50%	η % 75%	η % 100%	cos-ϕ 100%	Full load current [A] 230 V	Full load current [A] 400V	Locked rotor current [A] 230 V	Locked rotor current [A] 400V	Rotation speed min-1	Input [kW]
ETM 3 71-0,75-2	71	80	0,75	1	IE3	80,2	82,5	82,1	0,76	3,0	1,7	19,7	11,4	2845	0,92
ETM 3 71-1,1-2		80	1,1	1,5	IE3	81,3	82,8	82,7	0,77	4,3	2,5	28,8	16,6	2830	1,35
ETM 3 80-1,5-2	80	90	1,5	2	IE3	83,5	84,3	84,6	0,77	5,8	3,3	44,1	25,5	2885	1,77
ETM 3 80-2,2-2		90	2,2	3	IE3	85,7	86,8	86	0,78	8,2	4,7	63,3	36,6	2875	2,59
ETM 3 90-3-2	90	100	3,0	4	IE3	85,9	87,5	87,1	0,78		6,4		51,8	2890	3,43
ETM 3 100-4-2	100	112	4,0	5,5	IE3	86	88,3	88,1	0,75		8,7		76,1	2920	4,65

EBARA Pumps Europe reserves the right to make changes without prior notice

MECHANICAL SEAL DATA

SHAFT SEAL
EVMS(.)1-3-5-10-15-20

1. Shaft Seal

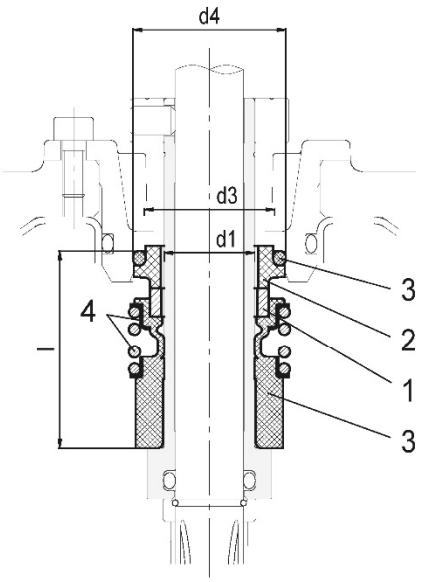

up to 16 bar
Cartridge Unbalanced type

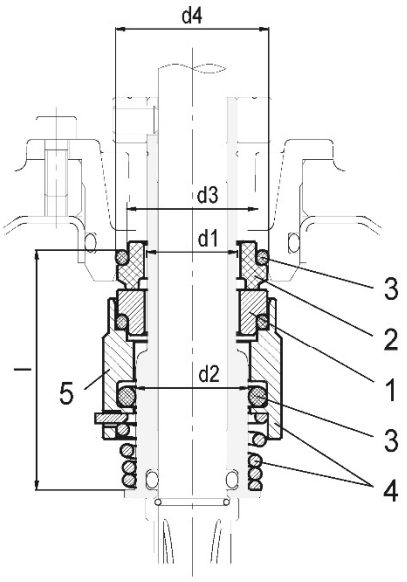

up to 25 bar
Cartridge Balanced type

2. Type of Shaft Seal and Dimensions [mm]

Type key	Availability	Max operating pressure	Max operating temperature	Shaft seal type		Shaft seal material								
				Cartridge		1		2		3		4	5	
				Type	Code	Rotating part	Code	Stationary part	Code	Elastomers	Code	Compression spring	Collar	Code
Q1BEG	●	16 bar	- 30°C to + 120°C	Unbalanced	(-)	SiC	(Q1)	Carbon	(B)	EPDM	(E)	AISI 316		(G)
BQ1VG	○	16 bar	- 30°C to + 80°C	Unbalanced	(-)	Carbon	(B)	SiC	(Q1)	FPM	(V)	AISI 316		(G)
HQ1BEG	●	25 bar	- 30°C to + 140°C	Balanced	(H)	SiC	(Q1)	Carbon	(B)	EPDM	(E)	AISI 316		(G)
HQ1BVG	○	25 bar	- 30°C to + 80°C	Balanced	(H)	SiC	(Q1)	Carbon	(B)	FPM	(V)	AISI 316		(G)
HQgQ1EG	○	25 bar	- 30°C to + 140°C	Balanced	(H)	SiC with graphite	(Qg)	SiC	(Q1)	EPDM	(E)	AISI 316		(G)
HQgQ1VG	○	25 bar	- 30°C to + 80°C	Balanced	(H)	SiC with graphite	(Qg)	SiC	(Q1)	FPM	(V)	AISI 316		(G)

● Standard ○ On request

Pump model	Shaft seal type		Max operating pressure	d1 [mm]	d2 [mm]	d3 [mm]	d4 [mm]	l [mm]
EVMS 1/3/5	Cartridge	Unbalanced	16 bar	16	-	23	27	35
		Balanced	25 bar		20			42.5
EVMS 10/15/20	Cartridge	Unbalanced	16 bar	20	-	29	35	37.5
		Balanced	25 bar		24			45

EBARA Pumps Europe reserves the right to make changes without prior notice

CONTROL PANEL VARIABLE SPEED

E-SPD+ SPECIFICATION

In-line electronic device for controlling electropumps, employing inverter technology. Starts and stops the pump and modulates the speed of the motor in relation to the water demand on the system, to maintain the operating pressure setting. Provides excellent comfort for the end user, significant energy savings and increased service life, the typical advantages of inverter controlled systems. E-SPD+ is an inverter that could be installed on the terminal box. It can be adapted on horizontal and vertical pumps. E-SPD+ can protect the system against overpressure, overcurrent, voltage fluctuation, dry run and water leak. The connection for this mode is made by communication line ON/OFF.

E-SPD+			
Power	Version	MT	TT
	Power Voltage	Single-phase 230 V	Three-phase 400 V
	Output Voltage (pump)	Three-phase 230 V	Three-phase 400 V
	Output frequence	50 ÷ 60Hz	
	Maximum pump power	2.2 kW	4 kW
	Max I in	20 A	12 A
	Max I out	11 A	11 A
Others	Pressure setpoint	0.5 ÷ 25 bar	
	Protection degree	IP 55	
	Ambient Temperature	-10 ÷ 40°C	
	Pressurisation units	2-3 pumps	
	Weight	2,7 Kg	
	Protection	Dry-running	
		Over/under voltage	
		Short-circuit	
		Overload	
		Overtemperature	
		Low pressure	
		Pressure sensor fault	
Directives	2014/35/EU (LVD), 2014/30/EU (EMC), 2011/65/EU (RoHS II)		

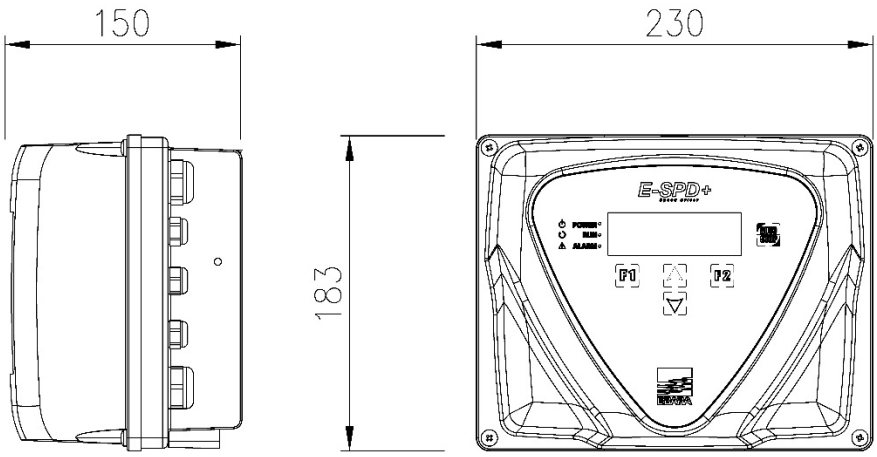

EBARA Pumps Europe reserves the right to make changes without prior notice