UK MANUFACTURER

# Saphir Plus

## Installation, Operating & Maintenance Manual

**For Saphir Plus Models:**

Saphir 1 / Saphir 2
Saphir 3 / Saphir 4
Saphir 7 / Saphir 10

WRAS APPROVED PRODUCT

ISO 9001 ISO 14001 INTEGRATED MANAGEMENT UKAS MANAGEMENT SYSTEMS 0015

dwi

10 YEAR STAINLESS STEEL CHAMBER GUARANTEE

Daro UV SYSTEMS

+44 (0)1787 370187
sales@darouv.co.uk

**darouv.co.uk**

Unit 9 Ballingdon Hill Ind. Est. Sudbury Suffolk CO10 2DX

Daro UV SYSTEMS

+44 (0)1787 370187
sales@darouv.co.uk

**darouv.co.uk**

Unit 9 Ballingdon Hill Ind. Est. Sudbury Suffolk CO10 2DX

# Table of Contents


| | |
|---|---|
| 04 | General |
| 05 | Safety |
| 06 | Installation |
| 11 | Controls & Indicators |
| 13 | Telemetry |
| 14 | Servicing & Maintenance |
| 16 | Cleaning |
| 17 | Warranty |
| 18 | Spares |
| 19 | General Arrangement Drawings |





+44 (0)1787 370187
sales@darouv.co.uk

**darouv.co.uk**

Unit 9 Ballingdon Hill Ind. Est. Sudbury Suffolk CO10 2DX

# General

**Description**

The units are designed for the ultraviolet disinfection of water between 5°C and 23°C and can be fitted anywhere in a water system provided the maximum pressure and peak flow requirements are less than the maximum ratings (see specifications). The slower the water flow, the more effective the unit will be. The unit must be protected from frost when not operating. For ease of maintenance, installing an isolation valve, a bypass and a drain valve with the unit is recommended. For single-pass applications, it is best to install the unit close to the point of use, removing the need to store large volumes of treated water. If a storage tank is used it must be closely covered and should be cleaned and sterilised when the UV unit is fitted.

**Water Quality and Filtration**

Ultraviolet light penetrates cloudy or coloured water much less than clear water, therefore, it is essential to ensure the water is clear prior UV treatment. A filter removing particles down to 5-10 micron in size will ensure the water is suitable. Filtration will also extend cleaning intervals. Dissolved organic matter and metallic salts, mainly iron, will also absorb UV light and reduce the unit's effectiveness. If parameters exceed the EEC maximum admissible concentrations, suitable pretreatment should be used to ensure water purity and effective UV treatment. Individual sites and requirements vary. Therefore, a site survey is recommended to determine the necessary ancillary equipment and filtration required before the UV equipment can be specified. If in doubt, please contact the distributor for advice.

**What is UVC?**

UV is part of the electromagnetic spectrum, with a wavelength just outside the visible light.

UV light with germicidal properties (UVC) can be used for disinfection.

The UVC lamp within the Saphir unit produces a wavelength of around 254nm (nanometres). At this wavelength when an organic cell is exposed to the UVC light, it causes a photochemical reaction within the Nucleic acids (DNA & RNA) of the micro-organisms, rendering them unable to reproduce. This process is referred to as 'inactivation'.

The UVC disinfection leaves no residual chemicals in the water after processing.


+44 (0)1787 370187
sales@darouv.co.uk
darouv.co.uk
Unit 9 Ballingdon Hill Ind. Est. Sudbury Suffolk CO10 2DX

# Safety

Read the instructions fully before use – installation and maintenance should be carried out by qualified individuals.

Do not operate the unit if any part appears damaged.

The Saphir range is supplied with a standard BS1363 UK mains plug and should be connected to an earthed 220-240V, 50-60Hz, single phase and neutral supply, via a 3A fused socket.

The control box is provided with a trailing earth lead – this must be connected to the stud on the chamber body.

UVC radiation is harmful to eyes and skin, care should be taken when using UVC.

The UV lamp must never be illuminated outside of the reaction chamber.

UV lamps contain various gasses and mercury. Care must be taken not to touch any of the glass (quartz) part of the lamp. It is recommended that gloves are used in case of lamp breakages.

If the lamp becomes damaged/broken ensure the area is well ventilated.

Professional help should be sought in the event of any mercury spillage.

The reaction chamber must be correctly earthed.

**Safe Disposal and Risk Due to Damaged Lamps**

The lamps used in the Saphir Systems are filled with gas and mercury vapour at low pressure. Although they will not explode if broken there is a toxicity risk from mercury contaminated glass. In the unlikely event that mercury is released from a broken lamp, evacuate the area and ventilate it. Seek professional help to clean up the spilled mercury. Do not use a vacuum cleaner as this will heat the mercury causing it to vaporize and create a greater widespread hazard.

+44 (0)1787 370187
sales@darouv.co.uk
darouv.co.uk
Unit 9 Ballingdon Hill Ind. Est. Sudbury Suffolk CO10 2DX

# Installation

**Saphir Plus Content**

Control Box
(Saphir Plus)

## Chambers

Saphir 10

Saphir 4/7

Saphir 2/3

Saphir 1

+44 (0)1787 370187
sales@darouv.co.uk
**darouv.co.uk**
Unit 9 Ballingdon Hill Ind. Est. Sudbury Suffolk CO10 2DX

## Reactor Chamber Installation

Saphir Systems are all fitted with BSPT fittings.

| Stock code/model | Saphir 1 | Saphir 2 | Saphir 3 | Saphir 4 | Saphir 7 | Saphir 10 |
|---|---|---|---|---|---|---|
| Connection (BSPT male) | ¾" | ¾" | ¾" | 1" | 1" | 1.5" |

Recommended Chamber and Flow Arrangements:

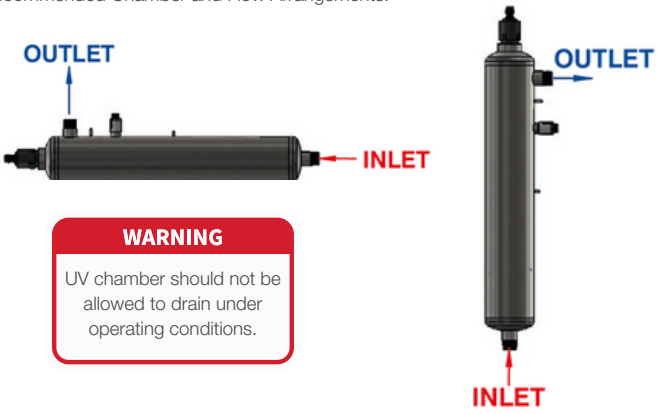


**WARNING**

UV chamber should not be allowed to drain under operating conditions.

## Control Box Installation

Suggested Control Box Locations:

The electrical control box can either be mounted directly to the chamber using the mounting brackets or wall mounted within 625mm of the chamber.

The electrical control box is fitted with an internal 2 amp fuse and external UK type G plug.

Refer to unit specification for electrical requirements.


+44 (0)1787 370187
sales@darouv.co.uk
darouv.co.uk
Unit 9 Ballingdon Hill Ind. Est. Sudbury Suffolk CO10 2DX

## Chamber Mountings

A Chamber wall-mount bracket

B Worm-drive Clip
a: small
b: large

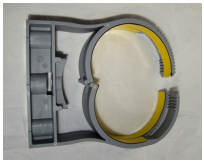

C Saphir 10 wall-mount brackets

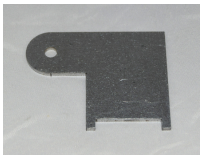

D Quartz Clamp Key

| Model | Quantity supplied | Control box bracket | Control box bracket | Worm clip small | Worm clip large | Wall Bracket Saphir 10 | Quartz clamp key |
|---|---|---|---|---|---|---|---|
| Saphir 1 | | 2 | 2 | 3 | 0 | 0 | 1 |
| Saphir 2 | | 0 | 2 | 3 | 0 | 0 | 1 |
| Saphir 3 | | 0 | 2 | 3 | 0 | 0 | 1 |
| Saphir 4 | | 0 | 2 | 3 | 0 | 0 | 1 |
| Saphir 7 | | 0 | 2 | 3 | 0 | 0 | 1 |
| Saphir 10 | | 0 | 0 | 0 | 1 | 2 | 1 |

All Saphir Plus and Saphir Pro models are supplied with a cable mounted connector for remote connection of the volt-free contact facility.

**Notes:**

- The control box must be earthed to the chamber using the earth strap provided
- The Saphir 10 system is supplied with large pipe clips to enable the unit to be wall mounted


+44 (0)1787 370187
sales@darouv.co.uk
darouv.co.uk
Unit 9 Ballingdon Hill Ind. Est. Sudbury Suffolk CO10 2DX

**Chamber Mounting**

The unit can be mounted horizontally or vertically, however, consideration should be given to the following:

**Chamber**

Before installing the unit, check the tightness of the quartz clamp. Using the key provided, ensure the clamp is tightened to 3.5 - 4.0Nm torque setting. (This is equivalent to a firm hand tight.)

**Vertical Mounting**

Water should enter at the bottom and exit at the top. Lamp access should be uppermost with a clear space equal to the length of the chamber at the end to allow the removal of lamp or quartz during routine maintenance.

**Control Box**

The control box can be mounted either to the UV chamber or to the wall directly. If it is chamber mounted horizontally, arrange the wall brackets to be approximately central to the chamber. In all cases ensure it is positioned so that the lamp cable is not stressed.

Saphir 1 including Saphir Plus and Saphir Pro versions

- Fit the two wall-mount brackets (B) to the wall. Space apart by about ¾ of the length of the chamber, with the slots uppermost, using the correct screws for your wall type (screws not included).
- Open the worm-drive clips to their maximum and fit over the chamber. Place the chamber on the wall brackets, slip the clips into the slots on the brackets and tighten.
- For chamber mounting of the control box, loosen the worm-drive clip by the lamp holder, fit the slot in the control box foot over the drive strap and tighten.
- Secure the other end of the control box to the chamber with the third worm-drive clip.
- For remote control box mounting, mount the chamber as above. Fit the control box wall brackets through the slot in the control box feet and screw directly to the wall.

Saphir 2, 3, 4 and 7 including Saphir Plus and Saphir Pro versions

- Fit the two wall-mount brackets (B) to the wall. Space apart by about ¾ of the length of the chamber, with the slots uppermost, using the correct screws for your wall type (screws not included).
- Open the worm-drive clips to their maximum and fit over the chamber. Place the chamber on the wall brackets, slip the clips into the slots on the brackets and tighten.
- For remote control box mounting, drill four holes on a grid of 180mm x 140mm (depending on the required orientation) and fit four off no. 6 screws. Use the keyholes to mount the control box.
- Where the control box is mounted on the chamber, undo the third worm-drive clip and thread it through the two slots on the rear of the control box. Re-engage the clip around the chamber and tighten.

Saphir 10 including Saphir Plus and Saphir Pro versions

Use the pipe clips provided to secure the Saphir 10 chamber to the wall. Fit the control box as described above, for types 2, 3, 4 and 7.


+44 (0)1787 370187
sales@darouv.co.uk
**darouv.co.uk**
Unit 9 Ballingdon Hill Ind. Est. Sudbury Suffolk CO10 2DX

**Lamp Installation**

The quartz sleeve is pre-installed into the Saphir reaction chamber. A lamp-locating spring is fitted inside the quartz sleeve and held in place with a closing cap. Remove the white cap and fit the lamp, being careful to only touch the caps at either end of the lamp with your fingers - avoiding the glass itself. Once the lamp is in place within the quartz, the lamp connector can then be fitted.

The lamp connector will only fit in one orientation. Once this has been connected the bayonet clamp can then be connected.

Refer to the lamp and quartz removal section (page 14) for detailed instructions on installing and removing the lamp and quartz.

| Stock code/model | Saphir 1 | Saphir 2 | Saphir 3 | Saphir 4 | Saphir 7 | Saphir 10 |
|---|---|---|---|---|---|---|
| Power supply VAC/ PH/ Hz* | 110 - 240V, 50 - 60Hz single phase | | | | | |
| Current rating - amps | 0.07 | 0.13 | 0.17 | 0.18 | 0.30 | 0.30 |
| Fuse - 3A HBC | ✓ | ✓ | ✓ | ✓ | ✓ | ✓ |
| Volt-free contact ratings | 3A @ 240VAC maximum. 0.5A @ 24VDC maximum | | | | | |
| 4-20mA Output | UV intensity output | | | | | |

It is highly recommended that the water supply is applied to the reaction chamber before the unit is powered up. Allow two minutes of flow through the chamber, then check the system for any signs of leaks. If the installation appears leak-free then the unit can be powered up.


+44 (0)1787 370187
sales@darouv.co.uk
darouv.co.uk
Unit 9 Ballingdon Hill Ind. Est. Sudbury Suffolk CO10 2DX

# Controls & Indicators

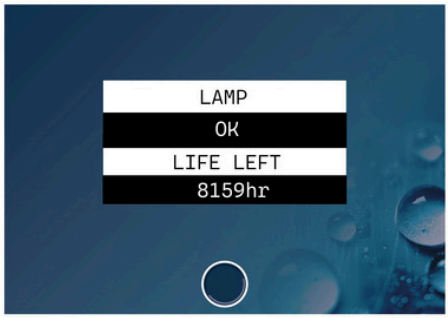


This screen will appear when the lamp has one month of lamp life left.

The two screens will alternate every 30 seconds.

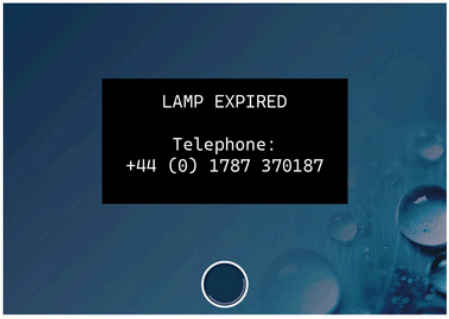



+44 (0)1787 370187
sales@darouv.co.uk
darouv.co.uk
Unit 9 Ballingdon Hill Ind. Est. Sudbury Suffolk CO10 2DX

Home Screen

This screen will appear when the lamp has one month of lamp life left.

The two screens will alternate every 30 seconds.

+44 (0)1787 370187
sales@darouv.co.uk
darouv.co.uk
Unit 9 Ballingdon Hill Ind. Est. Sudbury Suffolk CO10 2DX

# Telemetry

The Saphir plus is fitted with a volt-free relay (3 Amp) that switches with the lamp status. Access to the VFC is via an external 4 pin connector fitted at the top of the control box.

| Terminal no. | Description | Information |
|---|---|---|
| Terminal 1 | Common connection | |
| Terminal 2 | NIC | Active when lamp failed |
| Terminal 3 | Normally open | Active when lamp OK |
| Earth | Earth connection | |

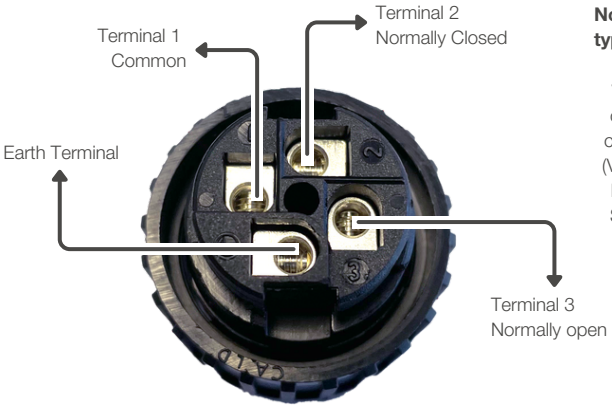


**Normally closed typical setup**

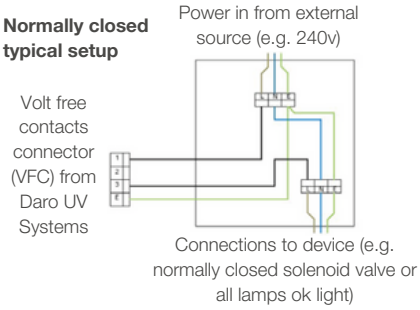





+44 (0)1787 370187
sales@darouv.co.uk

**darouv.co.uk**

Unit 9 Ballingdon Hill Ind. Est. Sudbury Suffolk CO10 2DX

# Servicing & Maintenance

**Maintenance**

The lamp gradually deteriorates during use and must be changed at regular intervals. It is not possible to measure the level of UV being produced by the lamp by visual inspection. Therefore, a regular routine of lamp replacement is recommended to ensure effective performance (see specification for lamp life).

To replace the lamp:

1. Isolate electrical supply to the unit.
2. Remove the bayonet lampholder cap. Carefully, partially withdraw the lamp, still connected to the lampholder, from the chamber.
3. Whilst supporting the lamp disconnect the lampholder from the lamp and gently slide the lamp straight out of the quartz sleeve without applying any side pressure.
4. Warning - levering the lamp against the quartz will result in damage to the sleeve.
5. Reverse the above to fit new lamp.
6. To reset the hour counter for Saphir Pro
   i) Reset switch cycles (“switch cycles” on menu, press the white button to clear, press the red button to confirm)
   ii) Reset UV sensor reading (“adjust” on menu, press the white button to select “yes”, press the red button to confirm)
   iii) Scroll to “config”, press the red button to confirm

The new settings will be applied.

**WARNING**

IMPORTANT:
Before starting any work on the system, isolate the unit from the power supply.

**Lamp and Quartz Services**

**IMPORTANT: Before starting any work on the system, isolate the unit from the power supply.**
Remove/isolate the water supply to the chamber, then drain chamber of water.
Remove the bayonet lamp holder cap and gently extract the lamp from the chamber.

Once the lamp had been extracted far enough to hold the white lamp cap and lamp holder these can be separated. Hold both parts and apply a little pressure to separate.


+44 (0)1787 370187
sales@darouv.co.uk
darouv.co.uk
Unit 9 Ballingdon Hill Ind. Est. Sudbury Suffolk CO10 2DX

The lamp can now be fully extracted, making sure to keep the lamp straight so as not to cause any damage to the quartz sleeve.

Next undo the quartz, using the key supplied, turn the quartz clamp anti-clockwise.

The quartz sleeve can now be removed and cleaned.

We recommend using a domestic scourer pad and warm water with 10% citric acid mix. Gentle use of the scourer pad will not cause any damage to the quartz sleeve.

**Only clean the outside of the quartz, as the inside is sealed in normal use.**

Once the quartz has been cleaned it can be refitted to the chamber.

A new seal kit should be applied. The EPDM O-ring must be fitted first followed by the plastic shim (this may be a black or white shim).

Refit the quartz clamp checking for any damage. If damaged then it should be replaced.

Tighten by turning clockwise. The quartz clamp should be tightened to six newton meters. The new lamp can now be fitted. The lamp holder will only fit one way round as the pins are asymmetrical.

Refit the lamp into the chamber, again keeping the lamp as straight as possible while inserting, to avoid damage to the quartz sleeve.

Once the lamp is in place, tighten the cap with the bayonet.

# Cleaning

In the event that sediments build up on the surfaces of the quartz sleeve occasional cleaning will be required. This is dependent on the nature of the water supply and its pre-treatment; therefore, no firm guidelines can be given on how regularly this will be needed. Less sediment may be experienced when the unit is vertical. The unit should be inspected after a few months use to give an indication to the amount of cleaning necessary. Where possible look into the unit using a torch once the lamp has been removed.

Where this is not possible the quartz sleeve will need to be removed as follows:

- Turn off the power and remove the lamp as above
- Turn off the water supply, isolate the input and output and drain the unit
- Unscrew end seal; remove the shim and O-ring seal. Remove the quartz tube. Note: Care must be taken when removing quartz tube, as it is not supported inside the chamber. To avoid breakage, it must be kept parallel with the axis of the unit when being changed
- Clean the outside of the sleeves using a mild abrasive such as wire wool or domestic scourer - a 10% solution of citric acid will help remove any hard deposits. Vigorous scrubbing will remove scale but will not scratch the quartz sleeve. When the quartz is clean, the friction experienced when cleaning the sleeve will be dramatically reduced. Do not use an industrial scourer, as these grades may be impregnated with abrasives which may damage the sleeve surface
- Do not attempt to clean the inside of the quartz sleeve – they are sealed in normal use and this is unnecessary
- Replace the O-ring, the shim washer, and tighten the seal with firm hand pressure and another quarter turn
- Dry the unit. Turn on the water and check for leaks
- Replace the lamp and switch on


+44 (0)1787 370187
sales@darouv.co.uk
**darouv.co.uk**
Unit 9 Ballingdon Hill Ind. Est. Sudbury Suffolk CO10 2DX

# Warranty

**12-month warranty for Water Disinfection Unit:**

Daro UV Systems provides a twelve (12) month warranty from the date of purchase for this ultraviolet water disinfection unit, provided that it is installed and maintained in accordance with the manufacturer's instructions. Faults regarding the material and workmanship of this unit will be repaired or replaced free of charge.

**Chamber guarantee**

Daro UV Systems provides a 10-year guarantee on all stainless steel chambers. All other parts are covered in the manufacturer's warranty.

**Warranty Terms**

This warranty will become void if the unit(s) are not installed and operated according to the instructions in the manual. It will not be valid for damage(s) which has (have) been caused by misuse, accidents, negligence, frost, fire, flood, or force majeure. This warranty will not be applicable to parts from which the label with the original manufacturing date code has been removed or made illegible. This warranty will only be valid if approved Daro UV Systems spare parts are used. All models are to be operated and maintained in accordance with the owner's operating instructions. This warranty will become void if the ultraviolet system is removed from its original place of installation, or if the operating pressure exceeds 10 bar, or if the temperature of the fed water exceeds 50°C or falls below freezing point.

All faulty parts must be returned to Daro UV Systems for inspection and repair or replacement. Daro UV Systems will check and test the faulty parts and identify the reason for the defect. Faulty parts will be replaced free of charge. Daro UV Systems will not be liable for any labour costs but only for repairs which have been carried out according to the works standards. Collateral or consequential damage(s) will not be covered by this warranty. All complaints should be notified in writing to Daro UV Systems within thirty (30) days from identifying any damage. The receipt of the plant must be presented to ensure the validity of this warranty.


+44 (0)1787 370187
sales@darouv.co.uk
**darouv.co.uk**
Unit 9 Ballingdon Hill Ind. Est. Sudbury Suffolk CO10 2DX

# Spares

| | Saphir 1 | Saphir 2 | Saphir 3 | Saphir 4 | Saphir 7 | Saphir 10 |
|---|---|---|---|---|---|---|
| **Lamps** | | | | | | |
| GER15SE | ✓ | | | | | |
| GER25SE | | ✓ | | | | |
| GER25XOSE | | | ✓ | | | |
| GER36SE | | | | ✓ | | |
| GER36XOSE | | | | | ✓ | ✓ |
| **Quartz Sleeve & Accesories** | | | | | | |
| QTZ15SE | ✓ | | | | | |
| QTZ25SE | | ✓ | ✓ | | | |
| QTZ36SE | | | | ✓ | ✓ | ✓ |
| USK 15/25/36 Seal Kit | ✓ | ✓ | ✓ | ✓ | ✓ | ✓ |


+44 (0)1787 370187
sales@darouv.co.uk
**darouv.co.uk**
Unit 9 Ballingdon Hill Ind. Est. Sudbury Suffolk CO10 2DX

DRAWN TO BS308

ORIGINAL SHEET SIZE A3

GENERAL NOTES

## Suggested Control Box locations

## Suggested Chamber & Flow arrangements

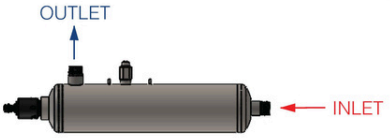


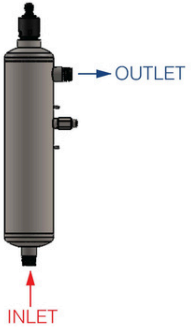


UV Chamber should not be allowed to drain under operating conditions

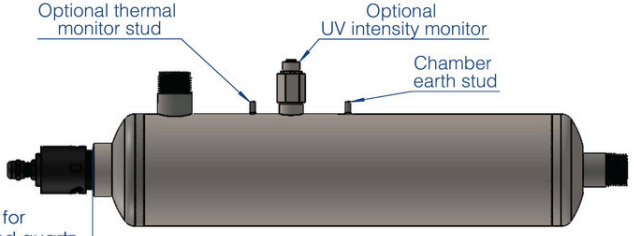


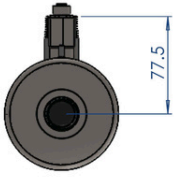


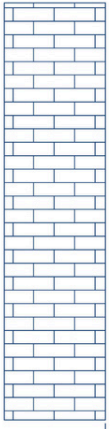

ALLOW 500mm for extraction of lamp and quartz

| No. | REVISION | DATE |
|---|---|---|
| 2 | UVM350 - UV monitor | 22/04/2024 J.Mulley |

DRG. No. - 709

SHEET No. - 401

ISSUE No. - 2

CUSTOMER -

PRODUCT :- Saphir 1 Pro/Plus Mk4 G.A

DATE DRAWN - 01/03/2024

DRAWN BY - J. Mulley

CHECKED BY - O. Hearn

SCALE - 1:3

ALL DIMENSIONS IN mm.
GENERAL TOLERANCES UNLESS OTHERWISE STATED -
DIMENSIONS WITH:
NO DECIMALS: ±0.5
ONE DECIMAL: ±0.1
ANGULAR DIMS: ±0.5°

COPYRIGHT
This drawing remains the property of Daro UV Systems and must not be reproduced without written consent.

Unit 9 Ballingdon Hill Ind. Est.,
Ballingdon, Sudbury,
Suffolk, CO10 2DX
TEL: (01787) 370187
EMAIL: sales@darouv.co.uk

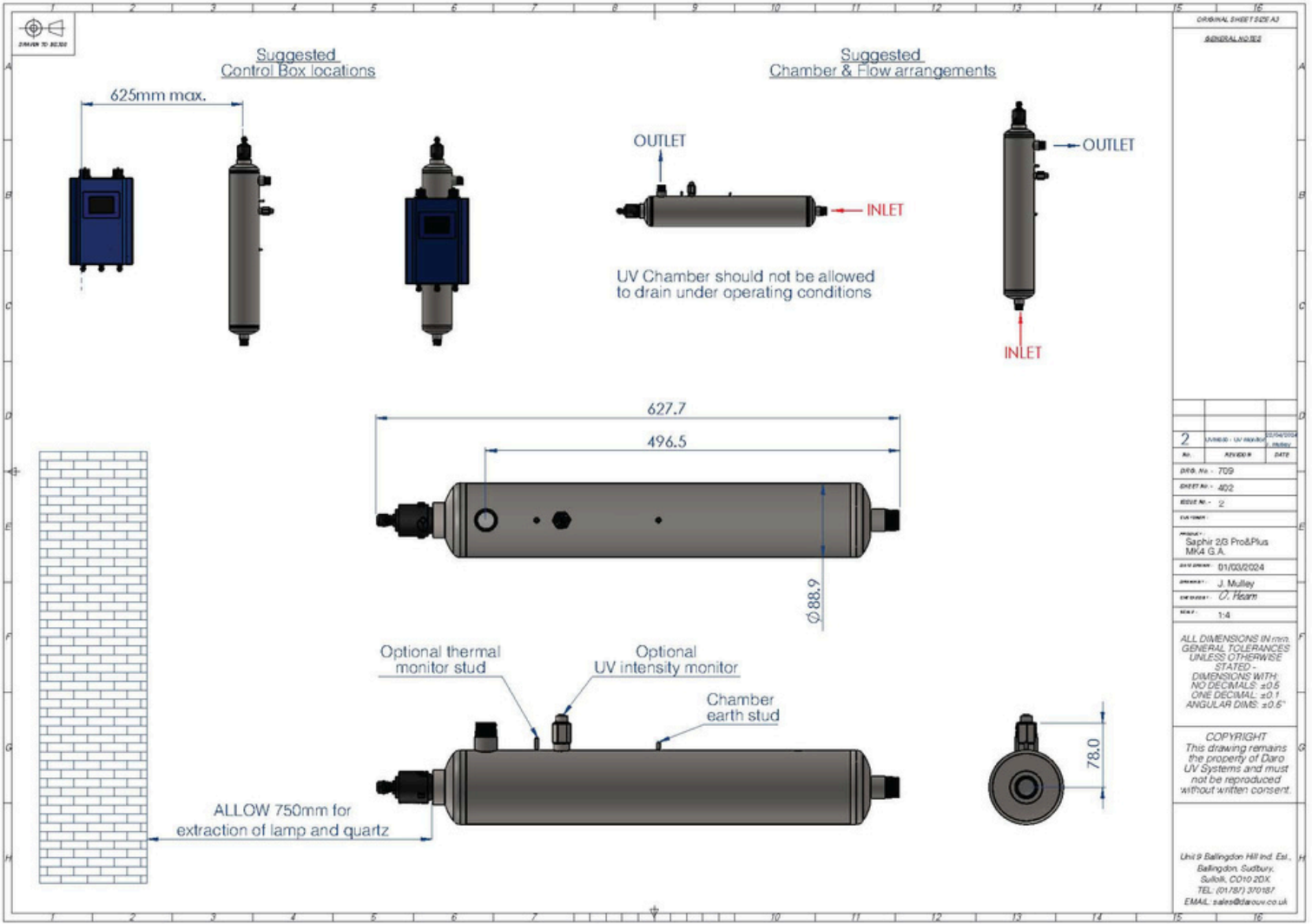

DRAWN TO SCALE
Suggested
Control Box locations
625mm max.
Suggested
Chamber & Flow arrangements
OUTLET
INLET
UV Chamber should not be allowed
to drain under operating conditions
OUTLET
INLET
627.7
496.5
Ø88.9
Optional thermal
monitor stud
Optional
UV intensity monitor
Chamber
earth stud
78.0
ALLOW 750mm for
extraction of lamp and quartz
ORIGINAL SHEET SIZE A3
GENERAL NOTES
2
No.
REVISION
DATE
DRG. No. - 709
SHEET No. - 402
ISSUE No. - 2
PRODUCT - Saphir 2/3 Pro&Plus MK4 G.A.
DATE DRAWN - 01/03/2024
DRAWN BY - J. Mulley
CHECKED BY - O. Hearn
SCALE - 1:4
ALL DIMENSIONS IN mm.
GENERAL TOLERANCES
UNLESS OTHERWISE
STATED -
DIMENSIONS WITH:
NO DECIMALS: ±0.5
ONE DECIMAL: ±0.1
ANGULAR DIMS: ±0.5°
COPYRIGHT
This drawing remains
the property of Daro
UV Systems and must
not be reproduced
without written consent.
Unit 9 Ballingdon Hill Ind. Est.,
Ballingdon, Sudbury,
Suffolk, CO10 2DX
TEL: (01787) 370187
EMAIL: sales@darouv.co.uk

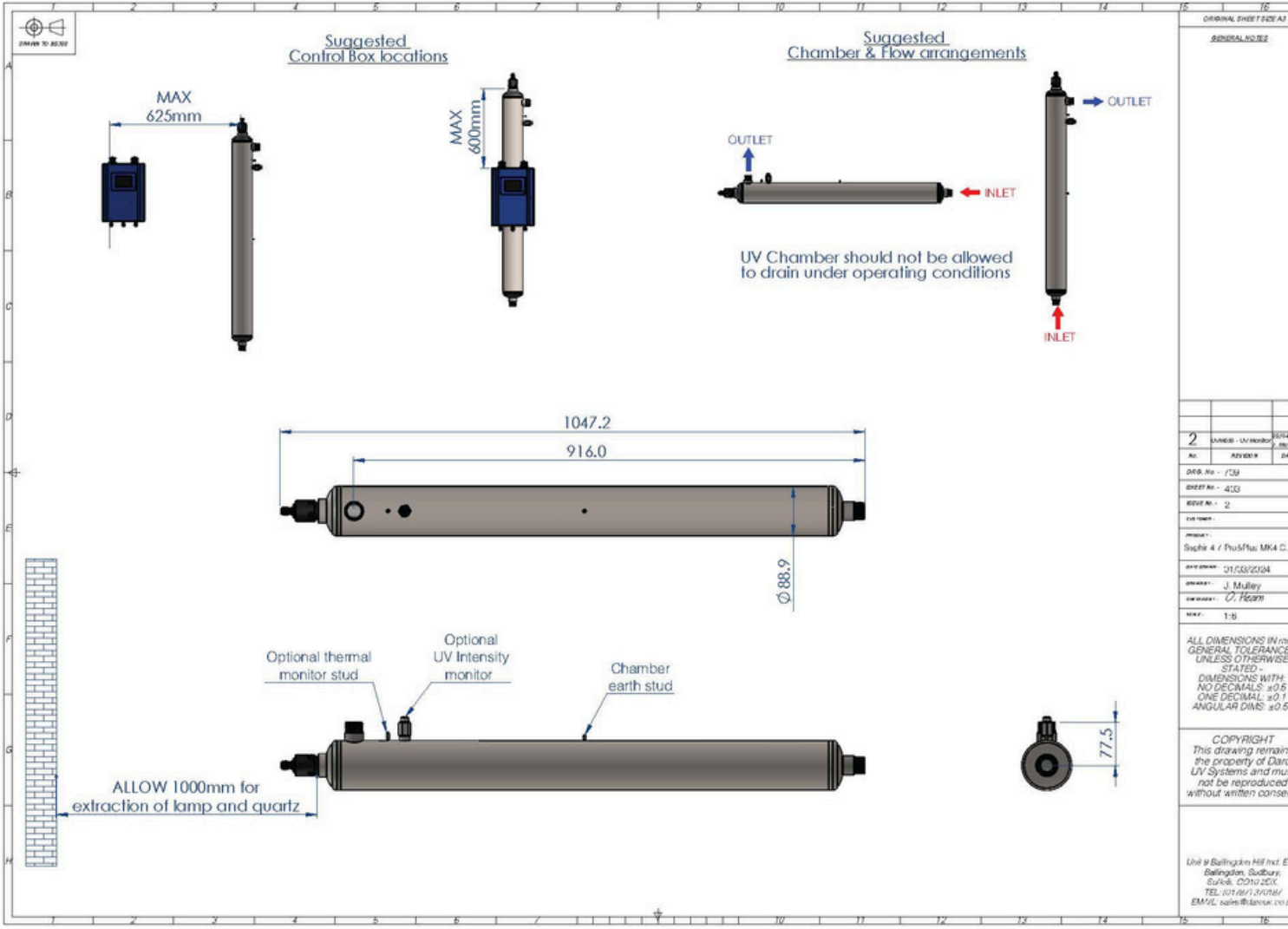

DRAWN TO SCALE
Suggested
Control Box locations
MAX
625mm
MAX
600mm
Suggested
Chamber & Flow arrangements
OUTLET
INLET
OUTLET
INLET
UV Chamber should not be allowed
to drain under operating conditions
1047.2
916.0
Ø 88.9
Optional thermal
monitor stud
Optional
UV Intensity
monitor
Chamber
earth stud
77.5
ALLOW 1000mm for
extraction of lamp and quartz
ORIGINAL SHEET SIZE A3
GENERAL NOTES
2
UV/MOB - UV Monitor
J. Mulley
No.
REVISION
DATE
DRG. No. - 709
SHEET No. - 403
ISSUE No. - 2
Sophie 4 / Pro&Plus MK4 C.A
01/03/2024
J. Mulley
O. Hearn
1:6
ALL DIMENSIONS IN mm.
GENERAL TOLERANCES
UNLESS OTHERWISE
STATED -
DIMENSIONS WITH:
NO DECIMALS: ±0.5
ONE DECIMAL: ±0.1
ANGULAR DIMS: ±0.5°
COPYRIGHT
This drawing remains
the property of Daro
UV Systems and must
not be reproduced
without written consent.
Unit 9 Ballingdon Hill Ind. Est.,
Ballingdon, Sudbury,
Suffolk, CO10 2DX.
TEL: (01787) 370187
EMAIL: sales@darouv.co.uk

DRAWN TO BS308

ORIGINAL SHEET SIZE A3

GENERAL NOTES

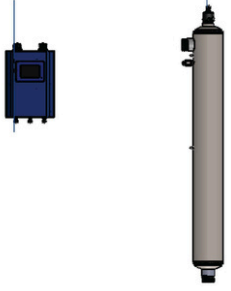


Suggested
Control Box locations

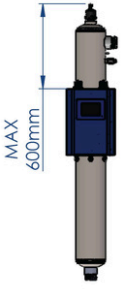


Suggested
Chamber & Flow arrangements

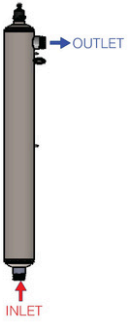


UV Chamber should not be allowed
to drain under operating conditions

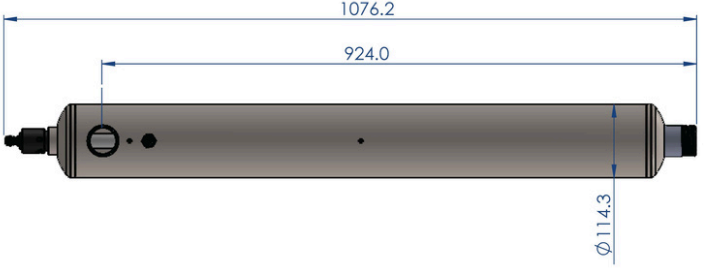


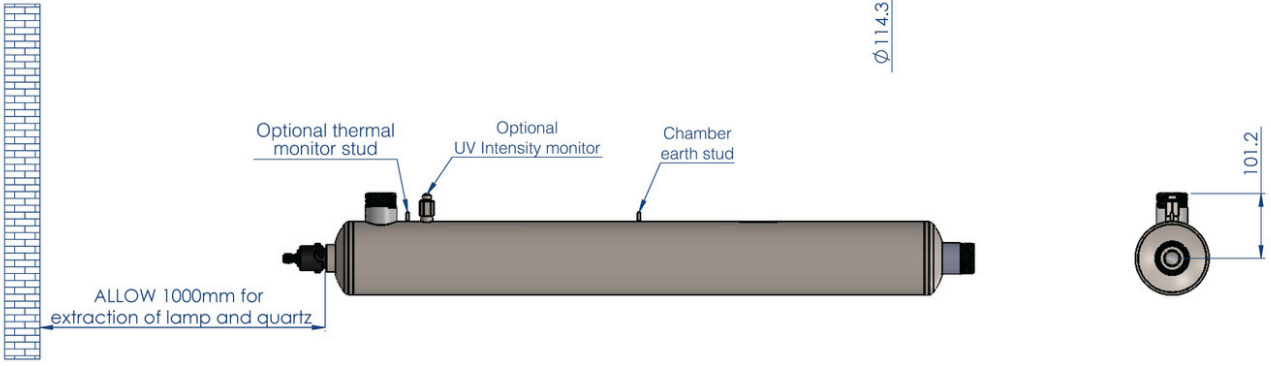


| No. | REVISION | DATE |
|---|---|---|
| 2 | UVM050 - UV Monitor | 22/04/2024 J. Mulley |

DRG. No. - 709

SHEET No. - 404

ISSUE No. - 2

CUSTOMER -

PRODUCT -
Saphir 10 Pro&Plus
MK4 G.A.

DATE DRAWN - 01/03/2024

DRAWN BY - J. Mulley

CHECKED BY - U. Ream

SCALE - 1:6

ALL DIMENSIONS IN mm.
GENERAL TOLERANCES
UNLESS OTHERWISE
STATED :
DIMENSIONS WITH:
NO DECIMALS: ±0.5
ONE DECIMAL: ±0.1
ANGULAR DIMS: ±0.5°

COPYRIGHT
This drawing remains
the property of Daro
UV Systems and must
not be reproduced
without written consent.

Unit 9 Ballingdon Hill Ind. Est.,
Ballingdon, Sudbury,
Suffolk, CO10 2DX.
TEL: (01787) 370187
EMAIL: sales@darouv.co.uk

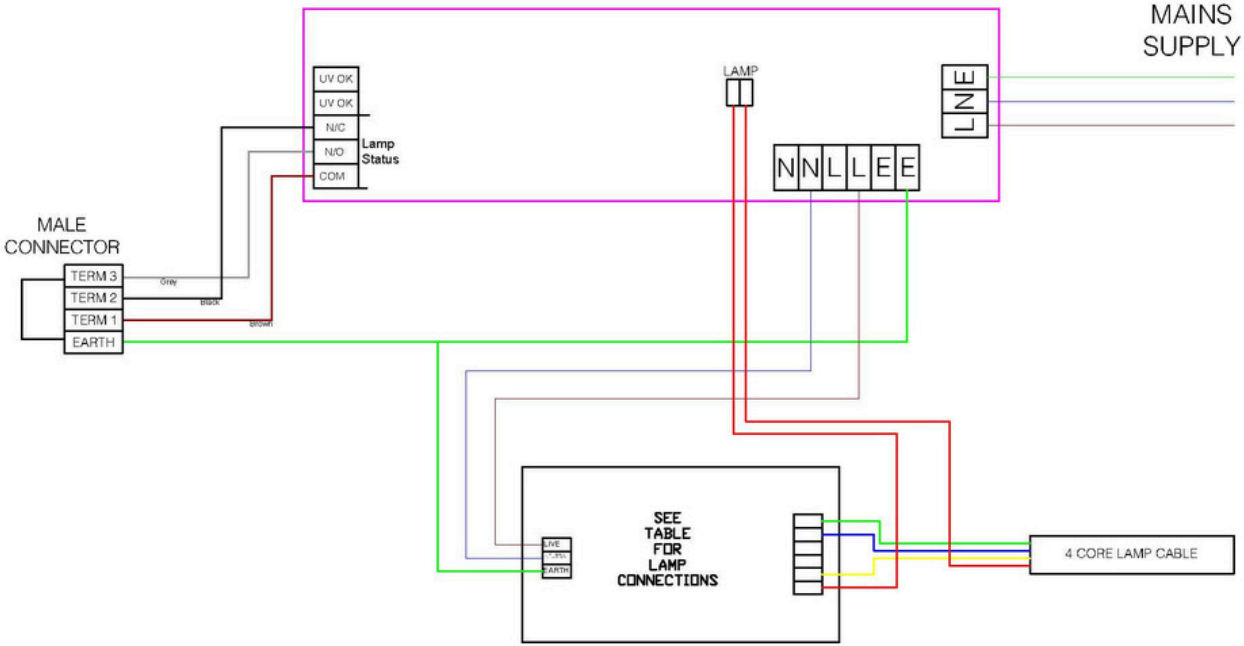


| UNIT | BALLAST | LAMP CORE COLOUR | | | |
|---|---|---|---|---|---|
| | | RED | YELLOW | BLUE | GREEN |
| SAPHIR 1/2/4 | Hasien | 6 | 7 | 8 | 9 |
| SAPHIR 3/7/10 | ROBERTSON | INNER RED | OUTER RED | INNER BLUE | OUTER BLUE |

ORIGINAL SHEET SIZE A3

GENERAL NOTES

| No. | REVISION | DATE |
|---|---|---|
| 3 | Add N/O terminal to board | 28/04/2025 |
| 2 | Male connector, BMS - TERM 163, Ballast table | 14/04/2024 |

DWG. No. - DUV 709

SHEET No. - 121

SCALE - 3

CLIENT - Saphir Plus Wiring Diagram

DATE - 14/02/2024

DRAWN BY - O. Hearn

CHECKED BY - J. Mulley

SCALE - N/A

ALL DIMENSIONS IN mm.
GENERAL TOLERANCES UNLESS OTHERWISE STATED
DIMENSION WITH:
NO DECIMALS: ±0.5
ONE DECIMAL: ±0.1
ANGILAR DIMS: ±0.5°

COPYRIGHT
This drawing remains the property of Daro UV Systems and must not be reproduced without written consent.

Daro UV Systems

Unit 9 Ballingdon Hill Ind. Est.,
Ballingdon,
Sudbury,
Suffolk,
CO10 2DX
TEL: (01787) 370187
FAX: (01787) 319924
EMAIL: info@darouv.co.uk

Daro
UV SYSTEMS

+44 (0)1787 370187
sales@darouv.co.uk

**darouv.co.uk**

Unit 9 Ballingdon Hill Ind. Est. Sudbury Suffolk CO10 2DX