Technical Data

Booster set name

3GPE MATRIX 5-9T/2,2 ESPM (UK)

Customer	Date	07.10.2026	Company	
Contact	Item no.		Issued by	
Phone	Project		Phone	
E-mail	Project ID		E-mail	

Requested data

1	Pump type		Booster Set	Fluid	Water
2	Number of pumps		3	Liquid temperature °C	20
3	Flow	m³/h		Kin. viscosity cSt	1.005
4	Head	m		Vapour pressure kPa	2.34
5	Geodetic head	m		PH value	
6	Inlet pressure	kPa	0	Density kg/m³	998.3
7	Available system NPSH		Ask our technical department.	Solids Weight %	0
8	Ambient temperature	°C	20	Installation height m	100

Booster Set

9	Booster set name		3GPE MATRIX 5-9T/2,2 ESPM (UK)		Frequency	Hz	50
10	Design		Booster Set				
11	Manufacturer		EBARA		Impeller Dia.	Max. mm	97
12	Speed	rpm	2850			Designed mm	97
13	No. of Stage		9			Min. mm	97
14	Connection	Suction side	UNI ISO 228	PN16	Flow	Operating m³/h	
15	Connection	Discharge side	UNI ISO 228	PN16		Max- m³/h	7.8
16	Max Working Pressure	kPa	1000			Min- m³/h	1.8
17	Shut-off head	kPa	1013.85		Head	Operating m	
18	Total weight	kg	See the table of "Dimensions".			- (Qmax.) m	39.6
19	Shaft power	kW				- (Qmin.) m	96.7
20					Max. Shaft Power at max. impeller	kW	1.96
21	Required NPSH	m			Efficiency	%	

Materials

22	Frame	Galvanized steel	External pump casing	AISI 304
23	Manifold	AISI 304	Shaft	AISI 304
24	Check valve	Brass / NBR	Shaft seal	Ceramic/Carbon/EPDM
25	Ball valve	Brass / PTFE	O-ring	EPDM
26	Impeller	AISI 304		
27	Casing	AISI 304		

Motor

28	Manufacturer		EPE Standard	Insulation class	F
29	Type		TEFC_MATRIX 5-8T/2.2_230_Three Phase	Phases	3~
30	Specific design		IE3 / 50 Hz / Pole pairs 1	Frame size	
31	Rated power	kW	2.2	Weight; motor kg	
32	Number of poles		2	Electric voltage V	230
33	Speed	rpm	2850	Electric current A	8.2
34	Degree of protection		IP 55		
35					

Remarks

Item intended for the UK market only.

EBARA

Performance curve

Booster set name

3GPE MATRIX 5-9T/2,2 ESPM (UK)

Customer	Date	07.10.2026	Company	
Contact	Item no.		Issued by	
Phone	Project		Phone	
E-mail	Project ID		E-mail	

Requested data

1	Flow	m³/h	
2	Head	m	
3	Geodetic head	m	

Booster set

Operating flow	m³/h		Frequency	Hz	50
Operating head	m		Number of poles		2
Impeller Diameter Designed	mm	97	Speed	rpm	2850

Test standard: ISO 9906:2012 - Grade3B

Water; 20°C; 998.3kg/m³; 1cSt

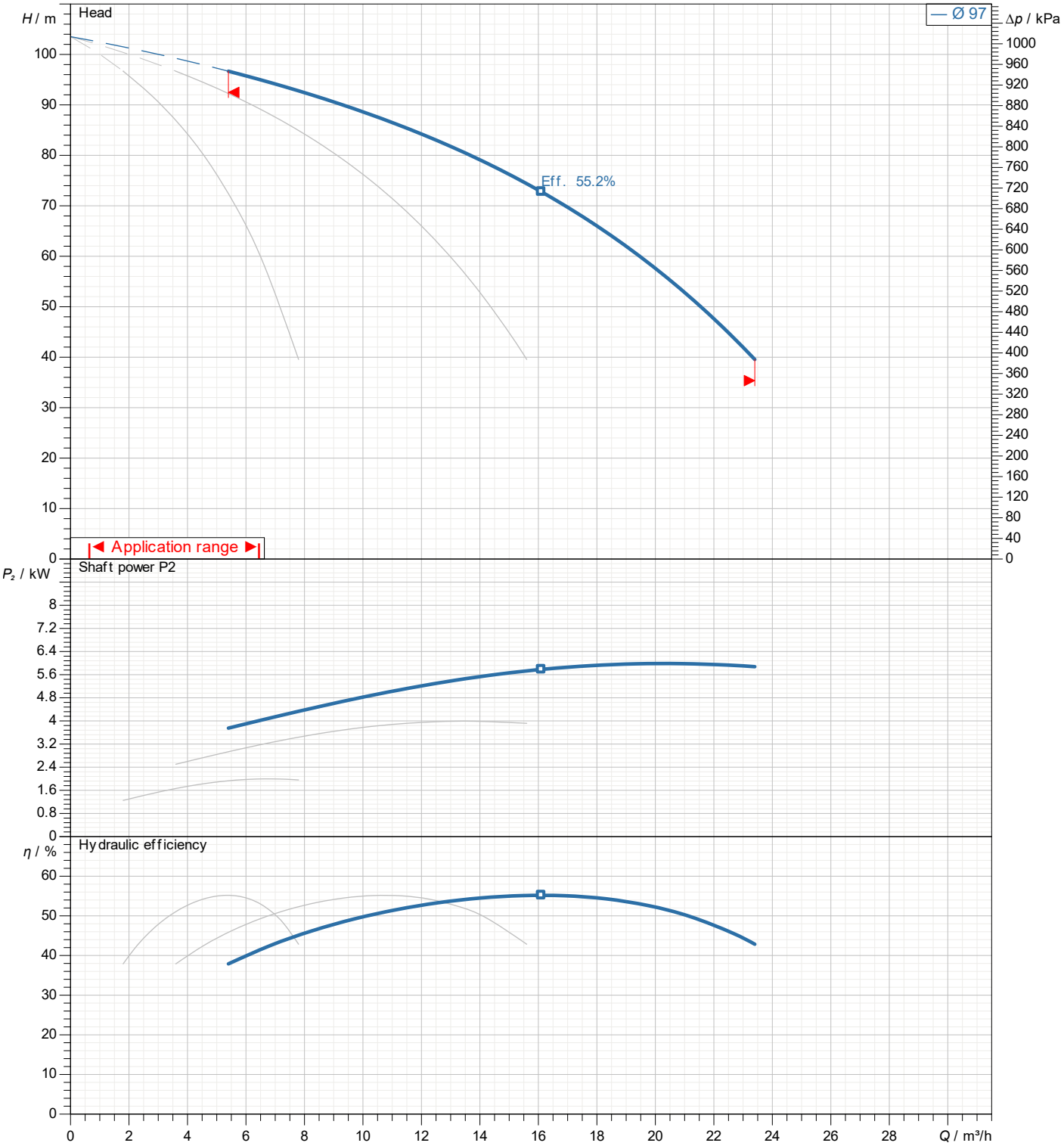

EBARA

Dimensions

Booster set name

3GPE MATRIX 5-9T/2,2 ESPM (UK)

Customer	Date	07.10.2026	Company	
Contact	Item no.		Issued by	
Phone	Project		Phone	
E-mail	Project ID		E-mail	

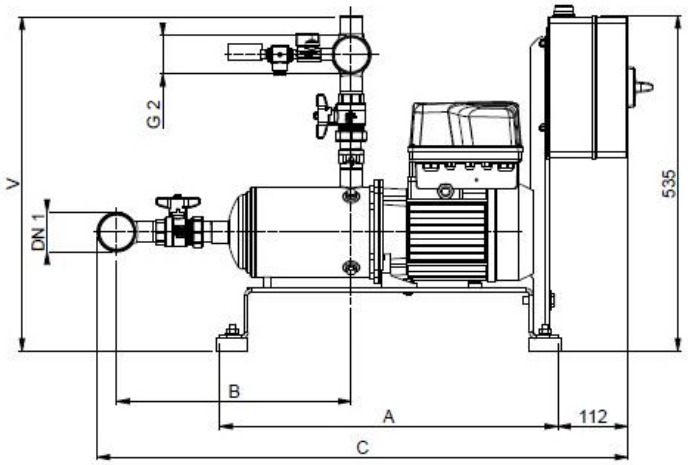

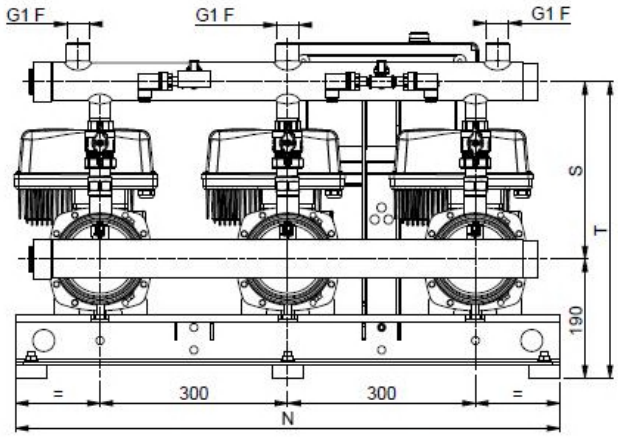

Dimensions in	mm							
1	A	540						
2	B	420						
3	C	870						
4	DN1	G2 1/2						
5	N	870						
6	S	280						
7	T	470						
8	V	530						
9	Weight kg	108						
10								
11								
12								
13								
14								
15								

EBARA

(1/2)
Construction

Booster set name

3GPE MATRIX 5-9T/2,2 ESPM (UK)

Customer	Date 07.10.2026	Company
Contact	Item no.	Issued by
Phone	Project	Phone
E-mail	Project ID	E-mail

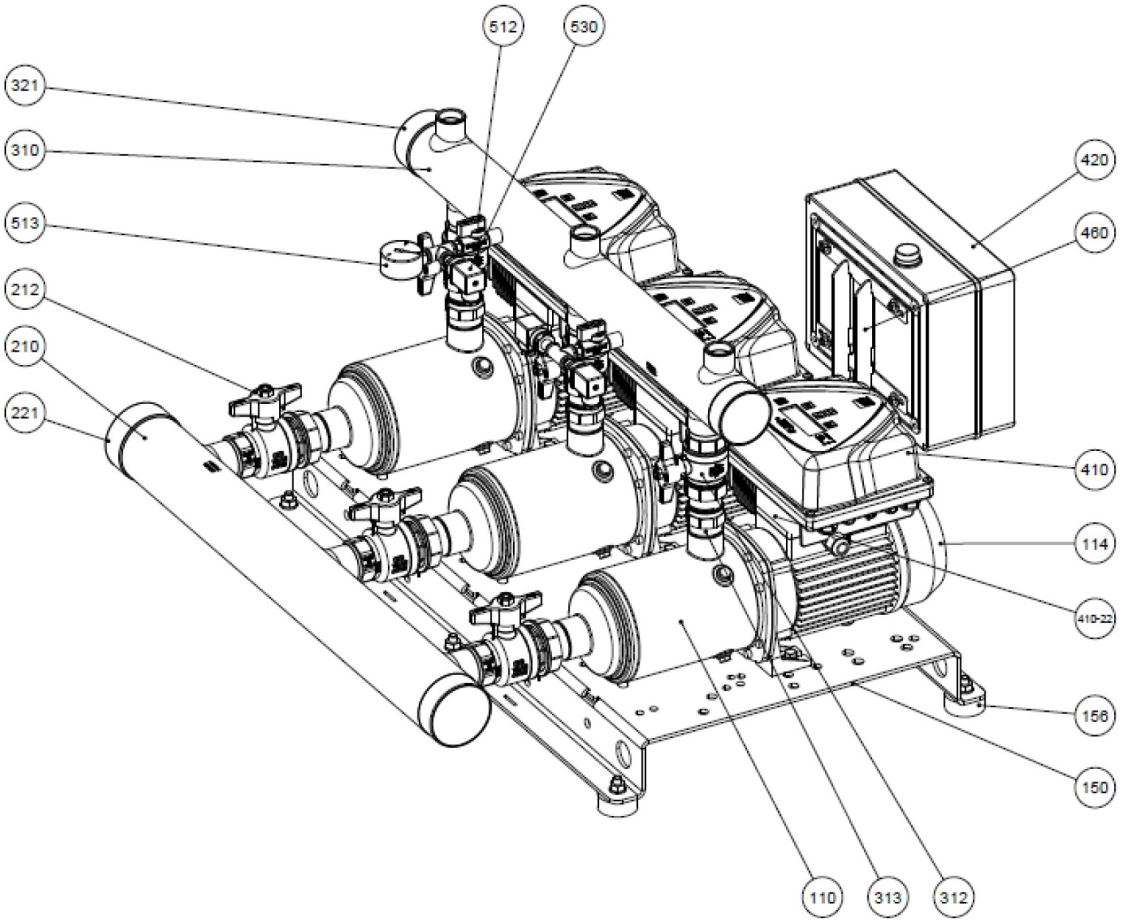

N°	PART NAME	MATERIAL	Quantity
110	Principal pump	-	3
114	Electric motor	-	3
150	Baseplate	Galvanized steel	1
156	Baseplate foot	SBR	6
210	Suction manifold	AISI 304	1
212	Union ball valve	Brass / P.T.F.E.	3
221	Threaded female cap	AISI 304	1
310	Discharge manifold	AISI 304	1
312	Union ball valve	Brass / P.T.F.E.	3
313	Check valve	Brass / NBR	3
321	Threaded female cap	AISI 304	1
410	E-SPD+	-	3
410-22	E-SPD+ adaptor	-	3
420	Protection panel	-	1
460	Protection panel frame	Galvanized steel	1
512	Ball valve	Brass / P.T.F.E.	2
513	Pressure gauge	Copper alloy / plastic	1
530	Pressure transmitter	-	3

(2/2)
Construction

Booster set name

3GPE MATRIX 5-9T/2,2 ESPM (UK)

Customer	Date 07.10.2026	Company
Contact	Item no.	Issued by
Phone	Project	Phone
E-mail	Project ID	E-mail

MECHANICAL SEAL

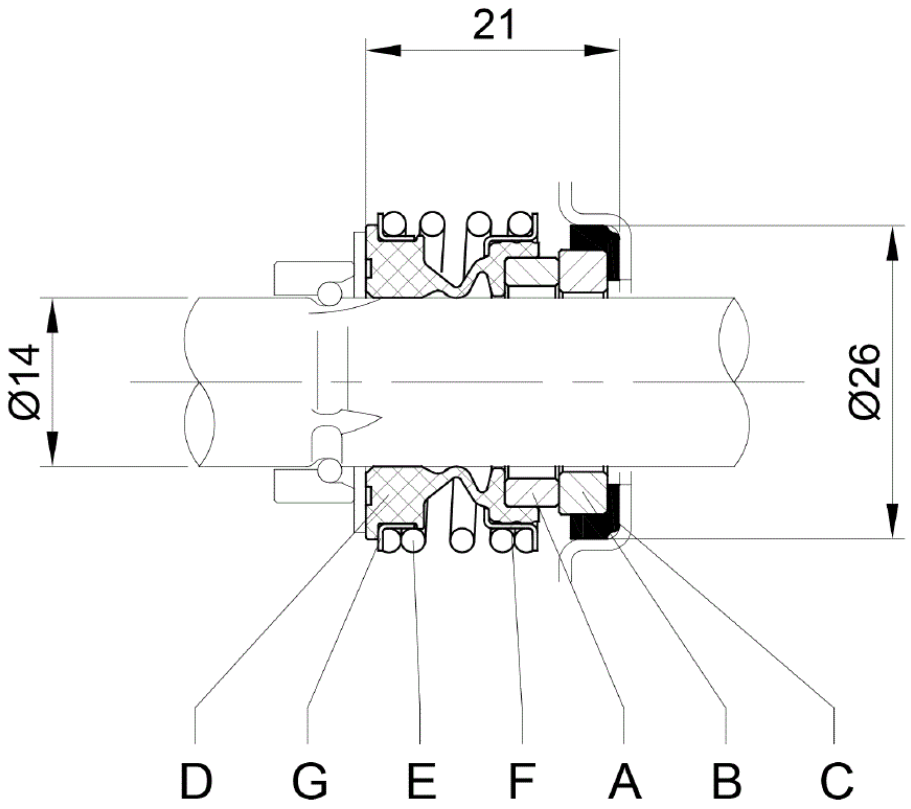

	Material						
	A Rotary seal ring	B Stationary seal ring	C Gasket	D Bellows	E Spring	F Frame	G Retainer ring
STANDARD*	Carbon	Ceramic	EPDM	EPDM	EN 1.4402 (AISI 316)	EN 1.4402 (AISI 316)	EN 1.4402 (AISI 316)

*Approval for drinking water application
WRAS Approval product

WRAS APPROVED PRODUCT