# Technical Data

**Booster set name**

3GPE MATRIX 3-5T/0,75 ESPM (UK)

| | | | | | |
|---|---|---|---|---|---|
| Customer | | Date | 07.10.2026 | Company | |
| Contact | | Item no. | | Issued by | |
| Phone | | Project | | Phone | |
| E-mail | | Project ID | | E-mail | |

**Requested data**

| | | | | | | |
|---|---|---|---|---|---|---|
| 1 | Pump type | | Booster Set | Fluid | | Water |
| 2 | Number of pumps | | 3 | Liquid temperature | °C | 20 |
| 3 | Flow | m³/h | | Kin. viscosity | cSt | 1.005 |
| 4 | Head | m | | Vapour pressure | kPa | 2.34 |
| 5 | Geodetic head | m | | PH value | | |
| 6 | Inlet pressure | kPa | 0 | Density | kg/m³ | 998.3 |
| 7 | Available system NPSH | | Ask our technical department. | Solids | Weight % | 0 |
| 8 | Ambient temperature | °C | 20 | Installation height | m | 100 |

**Booster Set**

| | | | | | | | |
|---|---|---|---|---|---|---|---|
| 9 | Booster set name | | 3GPE MATRIX 3-5T/0,75 ESPM (UK) | Frequency | | Hz | 50 |
| 10 | Design | | Booster Set | | | | |
| 11 | Manufacturer | | EBARA | Impeller Dia. | Max. | mm | 99 |
| 12 | Speed | rpm | 2850 | | Designed | mm | 99 |
| 13 | No. of Stage | | 5 | | Min. | mm | 99 |
| 14 | Connection Suction side | | UNI ISO 228 PN16 | Flow | Operating | m³/h | |
| 15 | Connection Discharge side | | UNI ISO 228 PN16 | | Max- | m³/h | 4.8 |
| 16 | Max Working Pressure | kPa | 1000 | | Min- | m³/h | 1.2 |
| 17 | Shut-off head | kPa | 553.21 | Head | Operating | m | |
| 18 | Total weight | kg | See the table of "Dimensions". | | - (Qmax.) | m | 20.0 |
| 19 | Shaft power | kW | | | - (Qmin.) | m | 52.2 |
| 20 | | | | Max. Shaft Power at max. impeller | | kW | 0.73 |
| 21 | Required NPSH | m | | Efficiency | | % | |

**Materials**

| | | | | |
|---|---|---|---|---|
| 22 | Frame | Galvanized steel | External pump casing | AISI 304 |
| 23 | Manifold | AISI 304 | Shaft | AISI 304 |
| 24 | Check valve | Brass / NBR | Shaft seal | Ceramic/Carbon/EPDM |
| 25 | Ball valve | Brass / PTFE | O-ring | EPDM |
| 26 | Impeller | AISI 304 | | |
| 27 | Casing | AISI 304 | | |

**Motor**

| | | | | | |
|---|---|---|---|---|---|
| 28 | Manufacturer | | EPE Standard | Insulation class | F |
| 29 | Type | | TEFC_MATRIX 3-5T/0.75_230_Three Phase | Phases | 3~ |
| 30 | Specific design | | IE3 / 50 Hz / Pole pairs 1 | Frame size | |
| 31 | Rated power | kW | 0.75 | Weight; motor kg | |
| 32 | Number of poles | | 2 | Electric voltage V | 230 |
| 33 | Speed | rpm | 2850 | Electric current A | 3 |
| 34 | Degree of protection | | IP 55 | | |
| 35 | | | | | |

**Remarks**

Item intended for the UK market only.

EBARA

# Performance curve

**Booster set name**

3GPE MATRIX 3-5T/0,75 ESPM (UK)

| | | | | | |
|---|---|---|---|---|---|
| Customer | | Date | 07.10.2026 | Company | |
| Contact | | Item no. | | Issued by | |
| Phone | | Project | | Phone | |
| E-mail | | Project ID | | E-mail | |

**Requested data**

| | | | |
|---|---|---|---|
| 1 | Flow | m³/h | |
| 2 | Head | m | |
| 3 | Geodetic head | m | |

**Booster set**

| | | | | | | |
|---|---|---|---|---|---|---|
| Operating flow | m³/h | | Frequency | Hz | 50 |
| Operating head | m | | Number of poles | | 2 |
| Impeller Diameter Designed | mm | 99 | Speed | rpm | 2850 |

Test standard: ISO 9906:2012 - Grade3B

Water; 20°C; 998.3kg/m³; 1cSt

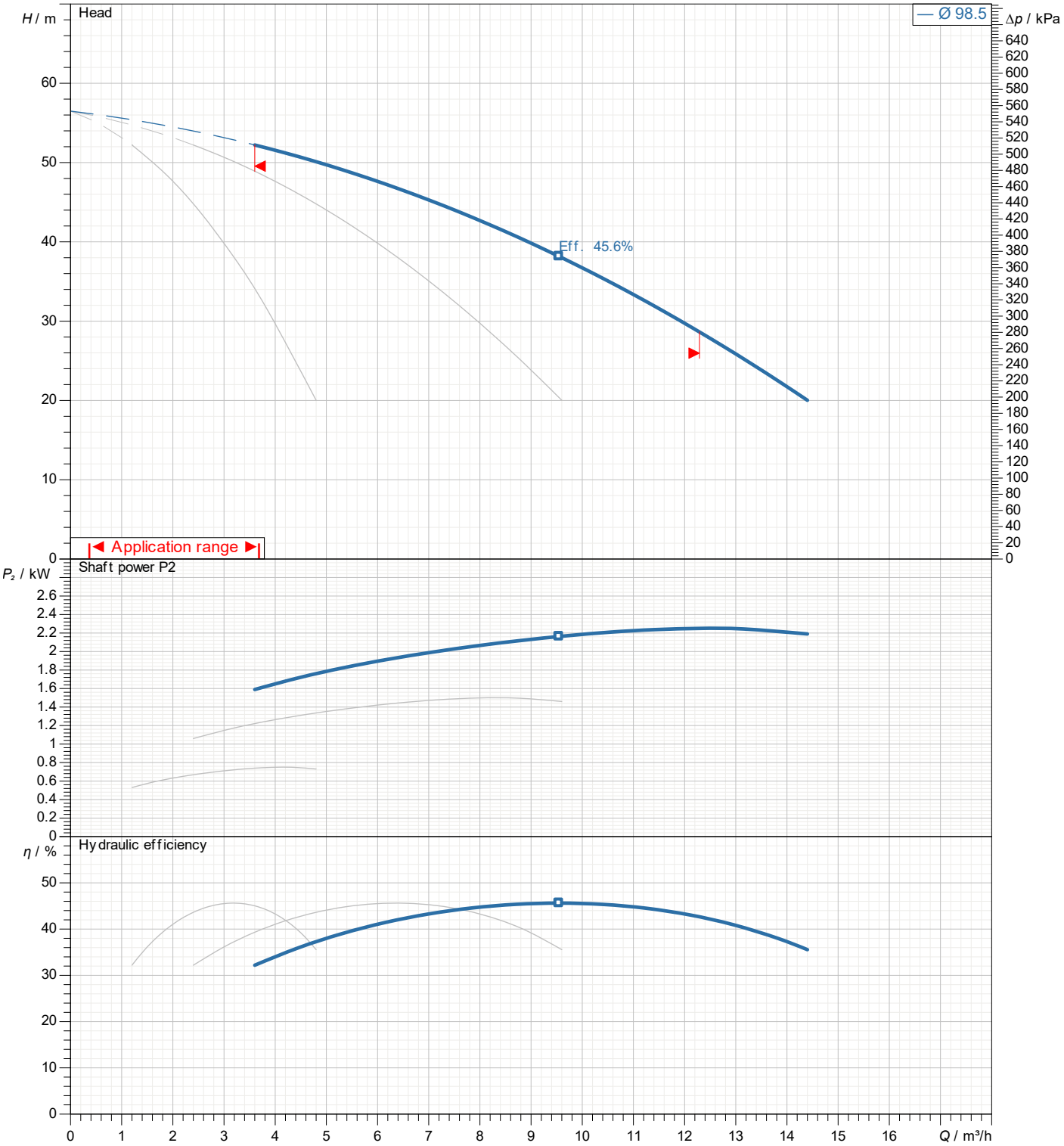


EBARA

# Dimensions

**Booster set name**

3GPE MATRIX 3-5T/0,75 ESPM (UK)

| | | | | |
|---|---|---|---|---|
| Customer | Date | 07.10.2026 | Company | |
| Contact | Item no. | | Issued by | |
| Phone | Project | | Phone | |
| E-mail | Project ID | | E-mail | |

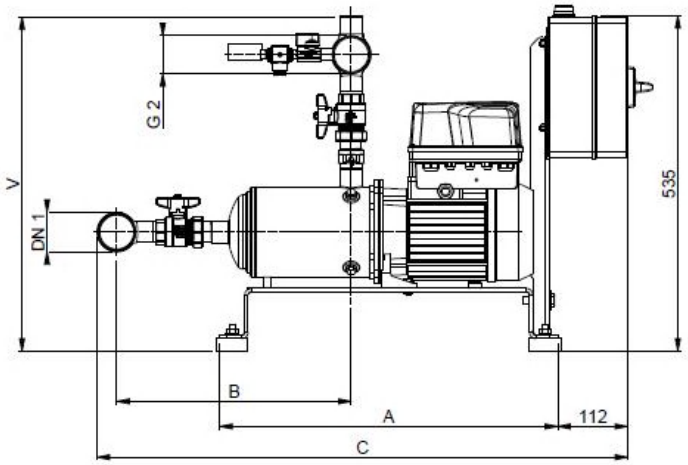


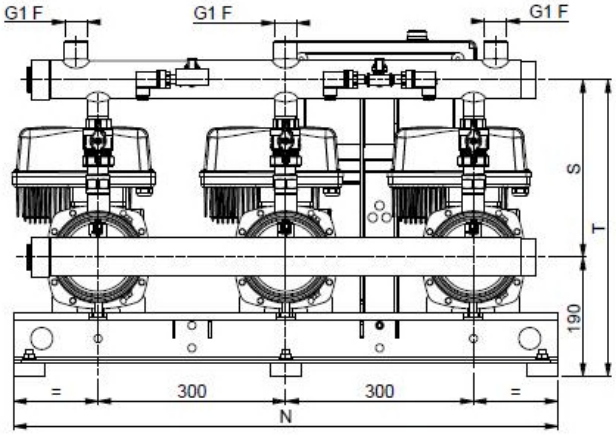


| Dimensions in | mm | | | | | | | |
|---|---|---|---|---|---|---|---|---|
| 1 | A | 380 | | | | | | |
| 2 | B | 300 | | | | | | |
| 3 | C | 770 | | | | | | |
| 4 | DN1 | G2 | | | | | | |
| 5 | N | 850 | | | | | | |
| 6 | S | 285 | | | | | | |
| 7 | T | 475 | | | | | | |
| 8 | V | 535 | | | | | | |
| 9 | Weight kg | 75 | | | | | | |
| 10 | | | | | | | | |
| 11 | | | | | | | | |
| 12 | | | | | | | | |
| 13 | | | | | | | | |
| 14 | | | | | | | | |
| 15 | | | | | | | | |

EBARA

# (1/2)
# Construction

**Booster set name**

3GPE MATRIX 3-5T/0,75 ESPM (UK)

| | | |
|---|---|---|
| Customer | Date 07.10.2026 | Company |
| Contact | Item no. | Issued by |
| Phone | Project | Phone |
| E-mail | Project ID | E-mail |

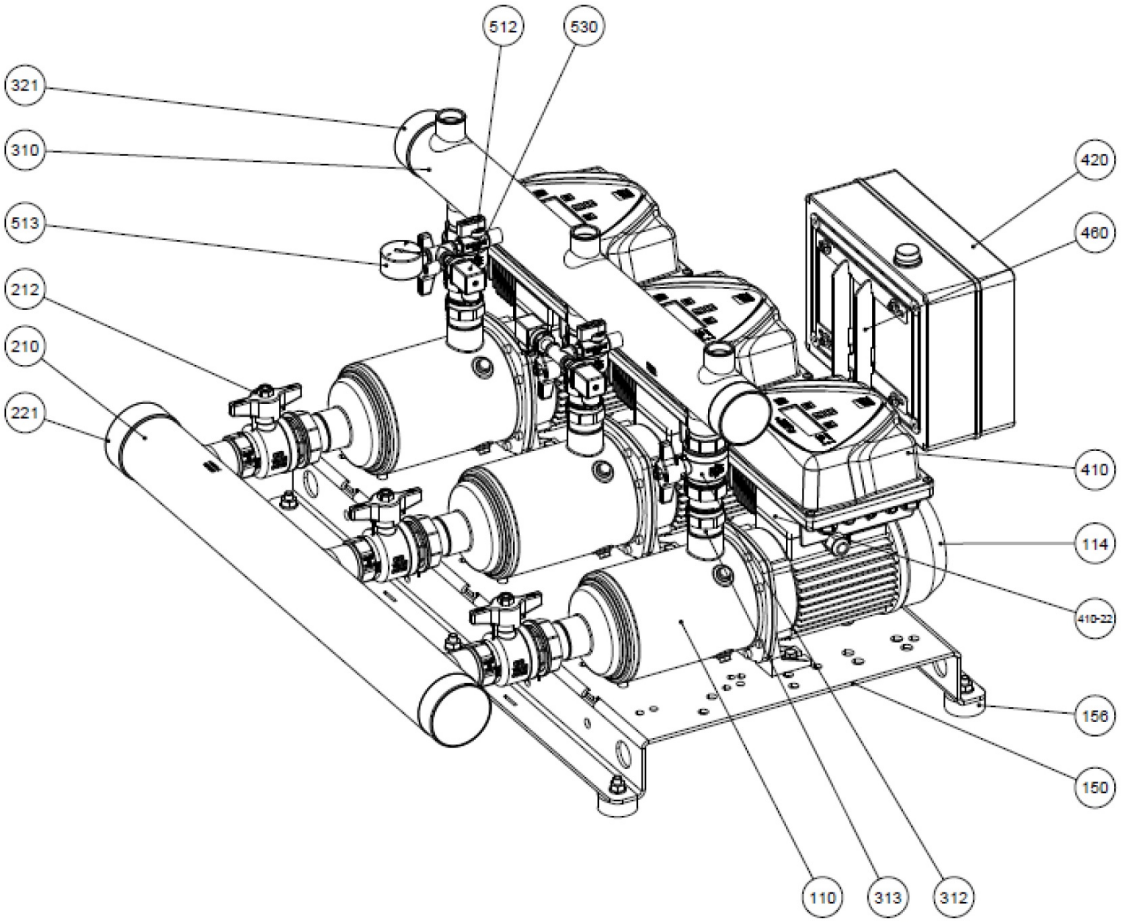


| N° | PART NAME | MATERIAL | Quantity |
|---|---|---|---|
| 110 | Principal pump | - | 3 |
| 114 | Electric motor | - | 3 |
| 150 | Baseplate | Galvanized steel | 1 |
| 156 | Baseplate foot | SBR | 6 |
| 210 | Suction manifold | AISI 304 | 1 |
| 212 | Union ball valve | Brass / P.T.F.E. | 3 |
| 221 | Threaded female cap | AISI 304 | 1 |
| 310 | Discharge manifold | AISI 304 | 1 |
| 312 | Union ball valve | Brass / P.T.F.E. | 3 |
| 313 | Check valve | Brass / NBR | 3 |
| 321 | Threaded female cap | AISI 304 | 1 |
| 410 | E-SPD+ | - | 3 |
| 410-22 | E-SPD+ adaptor | - | 3 |
| 420 | Protection panel | - | 1 |
| 460 | Protection panel frame | Galvanized steel | 1 |
| 512 | Ball valve | Brass / P.T.F.E. | 2 |
| 513 | Pressure gauge | Copper alloy / plastic | 1 |
| 530 | Pressure transmitter | - | 3 |

# (2/2)
# Construction

**Booster set name**

3GPE MATRIX 3-5T/0,75 ESPM (UK)

| | | |
|---|---|---|
| Customer | Date 07.10.2026 | Company |
| Contact | Item no. | Issued by |
| Phone | Project | Phone |
| E-mail | Project ID | E-mail |

## MECHANICAL SEAL

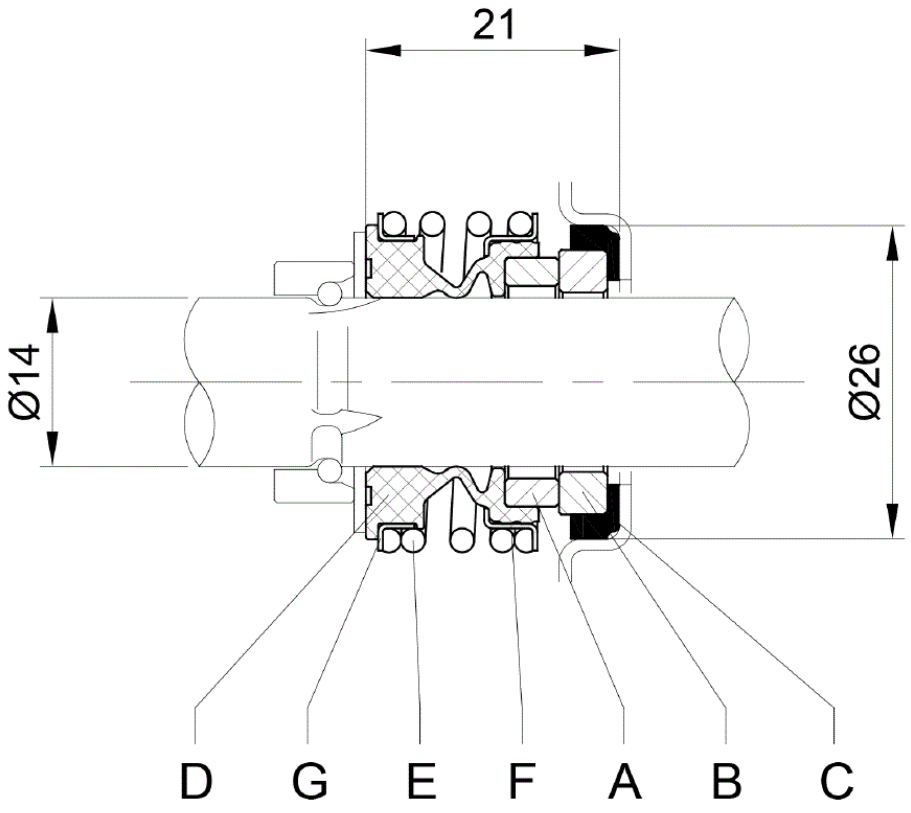


| | Material | | | | | | |
|---|---|---|---|---|---|---|---|
| | A Rotary seal ring | B Stationary seal ring | C Gasket | D Bellows | E Spring | F Frame | G Retainer ring |
| **STANDARD*** | Carbon | Ceramic | EPDM | EPDM | EN 1.4402 (AISI 316) | EN 1.4402 (AISI 316) | EN 1.4402 (AISI 316) |

*Approval for drinking water application
**WRAS Approval product**

WRAS APPROVED PRODUCT