Anglian Pumping Services
Aps House, The Drift, Nacton Road
UNITED KINGDOM-IP3 9QR Ipswich
01473 719950
josh@anglianpumping.com

COM 500/22

Company	Anglian Pumping Services	Customer		Date	11/26/2020
Contact	Joshua Harvey	Contact		List price	Price on req.
Project		Phone number		Family code	
Project no.		Email		Item no.	101820070

Performance according to ISO 9906:2012 – Grade 3B

Power datas referced to:
Water, pure [100%] ; 4°C; 1000kg/m³; 1.57mm²/s

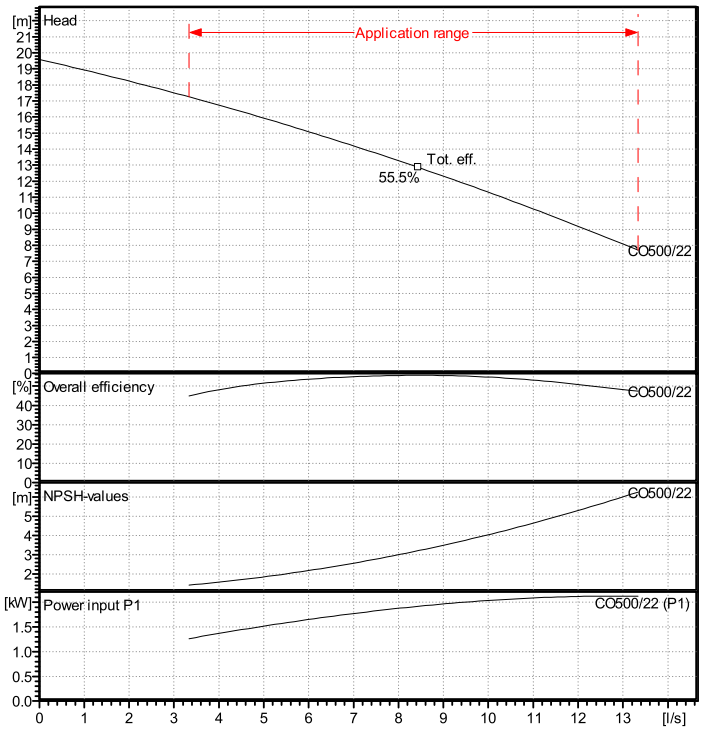

Operating Data Specification

Flow	0 l/s
Head	0 m

Hydraulic data (duty point)

Flow	
Head	
Power input	
MEI >=0,4	

Pump data

Make	Lowara
Type	COM 500/22
Open impeller centrifugal pump with threaded connections	
Speed	2900
Head H(Q=0)	19.6 m
Suction side	
Discharge side	
Types of installation	Monobloc
Weight	20 kg

Materials / seals

Pump body	Stainless steel
Impeller	Stainless steel
SEAL HOUSING	Stainless steel
Shaft extension	Stainless steel

Shaft Seal

Rotating Assembly	V-Ceramic
Fixed Assembly	B-Resin impregnated carbon
Elastomers	V-FKM (FPM)
Springs	G-AISI 316
Other Components	G-AISI 316

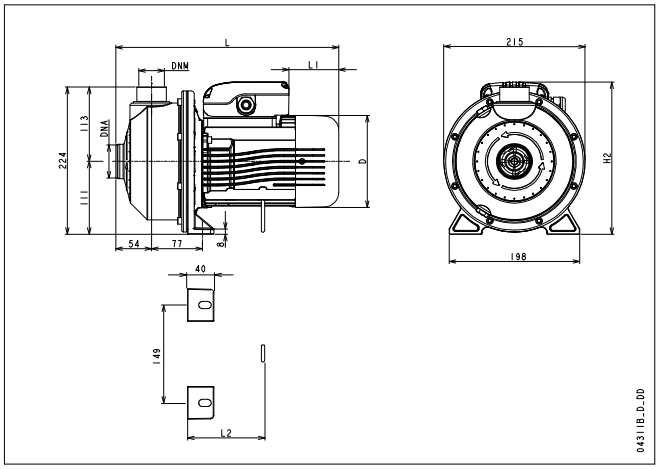

Motor data

Rated power P2	2.2 kW	Nom. Speed	2825 rpm
Frequency	50	Phase	1~
Rated voltage	230 V	Rated current	11.6 A
Protection class	IP 55	Insulation class	F
Permitted voltage tolerance +/- 10%			

Dimensions

mm

D	174		
DNA	Rp2		
DNM	Rp 1½		
H2	262		
L	429		
L1	84		

Note: